AGENDA PACKET

AUGUST 17, 2021 MEETING

Receiver of Taxes email, dated July 26, 2021		**47**
Deed information		**48**
Dept of Health approved plans; Robert Roselli, PE; dated February 8, 2021		**61**
Architectural drawings; Demasi Architects, PC; dated October 23, 2020		**62**
Photographs supplied by applicant July 20, 2021		**68**
SCHILKE RESIDENCE, 3 BEAVER POND, SOUTH SALEM	**Cal #03-20WV**	**Cal #29-21WP**
No new materials.		**-**
COMPREHENSIVE PLAN STEERING COMMITTEE'S DRAFT RFP FOR CONSULTING SERVICES TO UPDATE THE 1985 MASTER PLAN		
Town Board Resolution make a review referral, dated August 10, 2021	**N/A**	**72**
Draft of the RFP, dated July 25, 2021		**73**
PREPARATION OF MEETING MINUTES	**N/A**	**-**
No materials.		

TOWN OF LEWISBORO
Westchester County, New York

Planning Board
79 Bouton Road
South Salem, New York 10590

Tel: (914) 763-5592
Fax: (914) 875-9148
Email: planning@lewisborogov.com

AGENDA

Tuesday, August 17, 2021

79 Bouton Road, South Salem
Justice Court

Meeting will start at 7:30 p.m. and end at or before 11:00 p.m.

NB: The Planning Board meets in the town's courtroom. The court complies with directives from the state unified court system, and we must conform to their procedures. At present we must operate at 50% capacity, and **masks are mandatory for everyone** in the room.

This is an in-person meeting with the possibility of live streaming to Lewisboro TV YouTube channel.
https://www.youtube.com/channel/UCNUNE5gXs5rnHcyR4l6dikA

I. DECISION

Cal #06-21PB
Laff Residence, 1 White Birch Lane, Goldens Bridge, NY 10526, Sheet 7I, Block 11139, Lot 56 (Mark and Sharon Laff, owners of record) – Application for a Waiver of Site Development Plan Procedures related to the installation of two HVAC condensers.

II. EXTENSION OF TIME REQUEST

Cal #08-12PB
Petruccelli/Badagliacca, Oscaleta Road, South Salem, NY 10590 Sheet 33B, Block 11157, Lot 46 (Steven Petruccelli and Teresa Badagliacca, owners of record) - Request for a 90-day Extension of Time to resolution granting Preliminary/Final Subdivision Plat, Negative Declaration Under SEQRA, dated October 21, 2014.

III. PUBLIC HEARING

Cal #04-19PB, Cal #17-19WP, Cal #06-19SW
Pound Ridge Stone, 2 West Road, South Salem, NY 10590, Sheet 49B, Block 9831, Lot 1 (Two West Road LLC, owner of record) – Application for site upgrades including additional parking and storage areas.

IV. SUBDIVISION

Cal #05-21PB
Truesdale Lake Property Owners Association, Hoyt Street paper road, South Salem, NY 10590, located between: Sheet 36A, Block 11172, Lot 34 and Sheet 36A, Block 10810, Lot 62 (Truesdale Lake Property Owners Association, Inc., owner of record) – Application for a lot-line change.

V. WETLAND PERMIT REVIEW

Cal #48-21WP
Clark Garage, 68 East Ridge Road, Waccabuc, NY 10597, Sheet 25, Block 10812, Lot 26 (Gerald Clark, owner of record) - Application for a detached garage.

VI. SITE VISIT REPORT

Cal #47-21WP, Cal #09-21SW
Beresford Residence, 253 Silver Spring Road, South Salem, NY Sheet 52, Block 10058, Lot 2 (David and Rozleny Beresford, owners of record) - Application for the construction of a single-family house.

VII. WETLAND VIOLATION

Cal #03-20WV

Schilke Residence, 3 Beaver Pond, South Salem, NY 10590, Sheet 46, Block 9827, Lot 184 (Sophia Chenevert-Schilke and D. Chenevert, owners of record)

VIII. DISCUSSIONS

Comprehensive Plan Steering Committee's Draft RFP for consulting services to update the 1985 Master Plan

Preparation of meeting minutes

IX. MINUTES OF July 20, 2021.

X. NEXT MEETING DATE: September 21, 2021.

TOWN OF LEWISBORO PLANNING BOARD

79 Bouton Road, South Salem , NY 10590 Tel: (914) 763-5592 Email: planning@lewisborogov.com

Site Development Plan/Subdivision Plat Application – Check all that apply:

Waiver of Site Development Plan Procedures	☒		
Site Development Plan Approval	Step I ☐	Step II ☐	
Special Use Permit Approval	Step I ☐	Step II ☐	
Subdivision Plat Approval	Step I ☐	Step II ☐	Step III ☐

Project Information

Project Name: 1 White Birch Lane Split System HVAC

Project Address: 1 White Birch Lane, Goldens Bridge, NY

Gross Parcel Area: .095 Zoning District: RMF Sheet(s): 7I Block (s): 11139 Lot(s): 56

Project Description: Install two Split System HVAC condensers

Is the site located within 500 feet of any Town boundary?	YES ☐	NO ☑
Is the site located within the New York City Watershed?	YES ☐	NO ☑
Is the site located on a State or County Highway?	YES ☐	NO ☑

Does the proposed action require any other permits/approvals from other agencies/departments?

Town Board ☐	ZBA ☐	Building Dept. ☑	Town Highway ☐
ACARC ☐	NYSDEC ☐	NYCDEP ☐	WCDH ☐
NYSDOT ☐	Town Wetland ☐	Town Stormwater ☐	

Other _____

Owner's Information

Name: Mark Laff Email: marklaff@gmail.com

Address: 140 Old Town Farm Road, Woodbury, CT Phone: 914-262-0419

Applicant's Information (if different)

Name: _____ Email: _____

Address: _____ Phone: _____

Authorized Agent's Information

Name: _____ Email: _____

Address: _____ Phone: _____

THE APPLICANT understands that any application is considered complete only when all information and documents required have been submitted and received by the Planning Board. The applicant further understands that the applicant is responsible for the payment of all application and review fees incurred by the Planning Board.

THE UNDERSIGNED WARRANTS the truth of all statements contained herein and in all supporting documents according to the best of his/her knowledge and belief, and authorizes visitation and inspection of the subject property by the Town of Lewisboro and its agents.

APPLICANT'S SIGNATURE _____ DATE _____

OWNER'S SIGNATURE _____ DATE 7/22/21

TOWN OF LEWISBORO PLANNING BOARD

79 Bouton Road, South Salem, NY 10590
Email: planning@lewisborogov.com
Tel: (914) 763-5592
Fax: (914) 875-9148

Affidavit of Ownership

State of : New York

County of: Westchester

Mark Laff, being duly sworn, deposes and says that he/she

resides at 140 Old Town Farm Road

in the County of Litchfield, State of Connecticut

and that he/she is (check one) ☑ the owner, or ☐ the _____
Title

of _____
Name of corporation, partnership, or other legal entity

which is the owner, in fee of all that certain log, piece or parcel of land situated, lying and being in the Town of Lewisboro, New York, aforesaid and know and designated on the Tax Map in the Town of Lewisboro as:

Block 1139, Lot ~~1139~~ 56, on Sheet 7I.

Owner's Signature

Sworn to before me this

22 **day of** July, 2021

ROBIN SUE HARRIS
Notary Public, State of New York
No. 05HA6359305
Qualified in Westchester County
Commission Expires May 30, 2025

Notary Public – affix stamp

TOWN OF LEWISBORO PLANNING BOARD

79 Bouton Road, South Salem, NY 10590
Email: planning@lewisborogov.com
Tel: (914) 763-5592 Fax: (914) 875-9148

Tax Payment Affidavit Requirement

This form must accompany all applications to the Planning Board.

Under regulations adopted by the Town of Lewisboro, the Planning Board may not accept any application unless an affidavit from the Town of Lewisboro Receiver of Taxes is on file in the Planning Board office. The affidavit must show that all amounts due to the Town of Lewisboro as real estate taxes and special assessments on the total area encompassed by the application, together with all penalties and interest thereon, have been paid.

Under New York State law, the Westchester County Clerk may not accept any subdivision map for filing unless the same type of affidavit from the Town of Lewisboro Receiver of Taxes is submitted by the applicant at the time of filing.

This form must be completed by the applicant and must accompany all applications to the Planning Board. Upon receipt, the Planning Board Secretary will send the form to the Receiver of Taxes for signature and notarization. If preferred, the applicant may directly obtain the signature of the Receiver of Taxes and notarization prior to submission.

To Be Completed by Applicant
(Please type or print)

MARK LAFF
Name of Applicant

LAFF HVAC
Project Name

Property Description

Tax Block(s): 11139

Tax Lot(s): 56

Tax Sheet(s): 7I

Property Assessed to: 1 WHITE BIRCH LANE

MARK & SHARON LAFF
Name c/o PO BOX 712
Address SOMERS NY 10589
City *State* *Zip*

The undersigned, being duly sworn deposes and says that a search of the tax records in the office of the Receiver of Taxes, Town of Lewisboro, reveals that all amounts due to the Town of Lewisboro as real estate taxes and special assessments, together with all penalties and interest thereon, affecting the premises described below, have been paid.

Signature - Receiver of Taxes: Deidre M Cayon 7/26/2021
Date

Sworn to before me this

26th **day of** July, 2021

JANET L. DONOHUE
NOTARY PUBLIC, STATE OF NEW YORK
No. 01DO6259627
Qualified in Westchester County
Commission Expires April 16, 2020

Janet L Donohue
Signature - Notary Public (affix stamp)

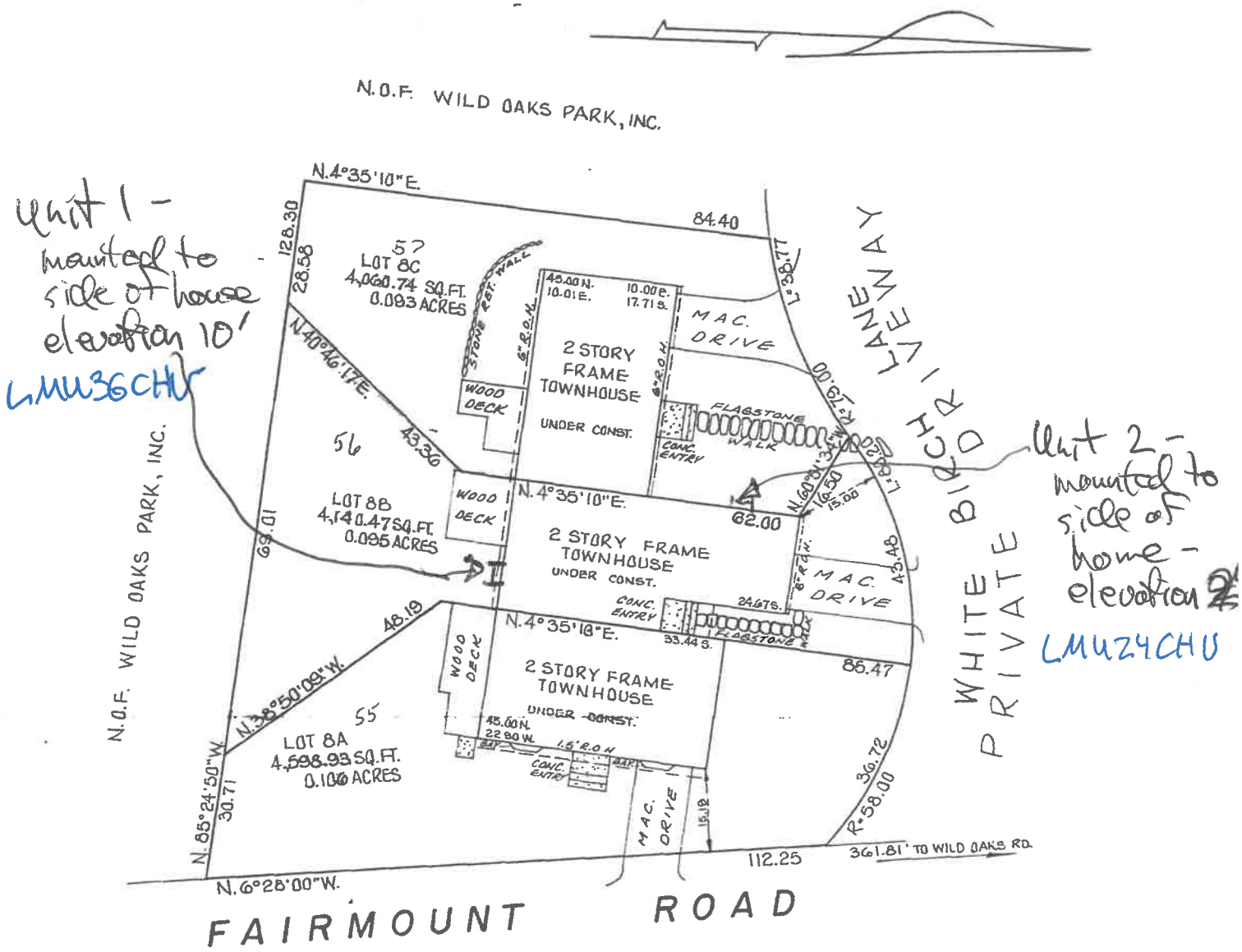

PREMISES HEREON BEING A PORTION OF PARCEL "B" AS SHOWN ON SUBDIVISION MAP "SECTION TWO, ED-2, WILD OAKS PARK", FILED MAY 18, 1970 AS MAP N° 17103.

ALL CERTIFICATIONS HEREON ARE VALID FOR THE MAP AND COPIES THEREOF ONLY IF SAID MAP OR COPIES BEAR THE IMPRESSED SEAL OF THE SURVEYOR WHOSE SIGNATURE APPEARS HEREON.

CERTIFIED TO
TITLE GUARANTEE CO. & BANKERS TRUST CO.
IN ACCORDANCE WITH THE EXISTING CODE OF PRACTICE FOR LAND SURVEYS ADOPTED BY THE N.Y.S.A.P.L.S.

BY Charles Riley
CHARLES RILEY N.Y.L.I.C.P.L.S.

CHARLES RILEY
LICENSED LAND SURVEYOR
21 NORTH BROADWAY
TARRYTOWN, N.Y.

SCALE - 1" = 20'
SEPT. 17, 1971
NOV. 24, 1971 FINAL

SURVEY OF PROPERTY
PREPARED FOR
CHAPPAQUA BUILDING CORP.
LOCATED IN THE
TOWN OF LEWISBORO
WESTCHESTER COUNTY, N.Y.

John J. Latella dba
Energy Recovery Zone
31 Jefferson Street
West Harrison, N.Y. 10604

Proposal

PROPOSAL NO.	DATE 7-19-18
BID NO.	ARCHITECT
TO Mark Laff	PHONE NO 914-262-0419 / DATE OF PLANS
ADDRESS 1 White Birch, Goldens Bridge, N.Y.	WORK TO BE PERFORMED AT:

We hereby propose to furnish the materials and perform the labor necessary for the completion of: (2) Two LG Electronics Ductless Inverter Heat Pump Systems Complete with all electrical work, line hide enclosures on outdoor refrigerant lines, commissioning of systems and Warranty Registration

Area below for additional description and/or drawings:

System #1

LMU36CHV - 36K BTU Outdoor Condensing Unit - Wall mounted above Future French Doors
LSN180HSV5 - 18K BTU Indoor Wall Unit - Living Room - LR/DR Wall to be demolished By Others
LSN120HSV5 - 12K BTU Indoor Wall Unit - Master Bedroom - Above Closet
LSN09HSV5 - 9K BTU Indoor Wall Unit - Front Bedroom - Piping along exterior door wall

System #2

LMU24CHV - 24K BTU Outdoor Condensing Unit - Wall Mounted on Side of Home
LSN120HSV5 - 12K BTU Indoor Wall Unit - Front Office 2nd Fl.
LMN078HVT - 7K BTU Indoor Wall Unit - Bathroom 2nd Floor
LMN078HVT - 7K BTU Indoor Wall Unit - Utility/Pet Room off Kitchen

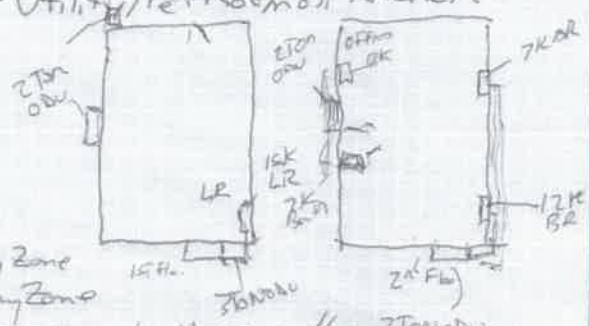

ALL WORK WILL BE PERFORMED ACCORDING TO MANUFACTURERS SPECIFICATIONS BY A CERTIFIED LG EXCELLENCT CONTRACTOR

12 year Parts & Compressor Warranty
1 year Labor Warranty by John J. Latella dba Energy Recovery Zone
Certificate of Insurance For John J. Latella dba Recovery Zone

Received Deposit 7-23-18 CK # 396 $8075.00

All material is guaranteed to be as specified, and the above work to be performed in accordance with the drawings and specifications submitted for above work and completed in a substantial workmanlike manner for the sum of Sixteen thousand one hundred fifty dollars and 00/xx Dollars ($ 16,150.00) with payments to be made as follows:

Deposit 50% Upon Acceptance $ 8,075.00 - Deposit
25% Upon Mobilization with Equipment on the job $ 4,037.50 - Mobilization
25% Final Payment upon Startup and Completion $ 4,037.50 - Completion

ACCEPTANCE OF PROPOSAL The above prices, specifications, and conditions are satisfactory and are hereby accepted. You are authorized to do the work as specified. Payments will be made as outlined above.

Signature Completed 8-10-18 Signature Mark Laff

Date 7/23/18

adams NC3818-50 11-12

Job Name/Location: _____ **Tag No:** _____

Date: _____ **For:** ☐ File ☐ Resubmit ☐ Approval ☐ Other _____

PO No.: _____

Architect: _____ **GC:** _____

Engr: _____ **Mech:** _____

Rep: _____
(Company) (Project Manager)

LMU36CHV

Multi F Inverter Heat Pump Outdoor Unit

LG Life's Good

Performance:

Cooling Capacity (Min.-Rated-Max., Btu/h)	8,400~32,000~38,400
Heating Capacity (Min.-Rated-Max., Btu/h)	9,240~36,000~41,600
Max. Heating Capacity at 5°F (Btu/h)	22,057
Max. Heating Capacity at 0°F (Btu/h)	18,472
Max. Heating Capacity at -4°F (Btu/h)	15,823
Cooling COP @95°F (Rated)	3.40
Heating COP @47°F (Rated)	3.85

Cooling Nominal Test Conditions:
Indoor: 80°F DB / 67°F WB
Outdoor: 95°F DB / 75°F WB

Heating Nominal Test Conditions:
Indoor: 70°F DB / 60°F WB
Outdoor: 47°F DB / 43°F WB

Electrical:

Power Supply (V/Hz/Ø)[1]	208-230V, 60, 1
MOP (A)	25
MCA (A)	17.9
Recommended Fuse Size (A)	25
Cooling Rated Amps (A)	15.13
Heating Rated Amps (A)	15.13
Compressor (A)	11.2
Fan Motor (A)	0.73
Locked Rotor Amps (A)	N/A

MOP - Maximum Overcurrent Protection MCA - Minimum Circuit Ampacity

Piping:

Refrigerant Charge (lbs.)	6.18
Liquid Line Connection (in., O.D.)	1/4 x 4
Vapor Line Connection (in., O.D.)	3/8 x 4
Maximum Total Piping[2] (ft.)	246.1
Min. / Max. ODU to IDU Piping (ft.)	10.0 / 82.0
Piping Length (no add'l refrigerant, ft.)	98.4
Maximum Elevation between ODU and IDU (ft.)	49.2
Maximum Elevation between IDU and IDU (ft.)	24.6

ODU = Outdoor Unit IDU = Indoor Unit

Features:

- Auto operation
- Auto restart
- Inverter (variable speed compressor)
- Defrost / Deicing
- Restart delay (three [3] minutes)
- Self diagnosis
- Soft start
- Low ambient cooling down to 14°F

Optional Accessories:

☐ PI-485 - PMNFP14A1
☐ MultiSITE Comm. Mgr. - PBACNBTR0A
☐ AC Smart 5 - PACS5A000
☐ ACP 5 - PACP5A000
☐ Power Distribution Indicator (PDI)

Premium - PQNUD1S41
☐ Mobile LGMV - PLGMVW100
☐ Drain Pan Heater - PQSH1200
☐ Low Ambient Baffle Kit (Cooling operation to -4°F) - ZLABGP04A

Operating Range:

Cooling (°F DB)[3]	14 to 118
Heating (°F WB)	-4 to +64

Unit Data:

Refrigerant Type	R410A
Refrigerant Control	EEV
Sound Pressure (Cool / Heat) ±1 dB(A)[5]	52 / 55
Net / Shipping Weight (lbs.)	137 / 148
Heat Exchanger Coating	Gold Fin™
Minimum No. of Indoor Units	2
Maximum No. of Indoor Units	4

Compressor:

Type	Twin Rotary
Quantity	1
Oil / Type	FVC68D

Fan:

Type	Propeller
Quantity	1
Motor / Drive	Brushless Digitally Controlled/Direct
Max. Airflow Rate (CFM)	2,119

Notes:

1. Acceptable operating voltage: 187V - 253V.
2. Piping lengths are equivalent.
3. Sound pressure levels are tested in an anechoic chamber under ISO Standard 3745.
4. All power / communication cable to be minimum 14 AWG, 4-conductor, stranded, shielded or unshielded wire, and must comply with applicable local and national codes. If shielded, the wire must be grounded to the chassis at the outdoor unit only.
5. Power wiring size must comply with the applicable local and national codes.
6. This data is rated 0 ft. above sea level, with 25 ft. of refrigerant line, and 0 ft. level difference between outdoor and indoor units. All capacities are net with a combination ratio between 95 - 105%.
7. Must follow installation instructions in the applicable LG installation manual.
8. Refer to the Combintion Data Manual for combination capacity tables.
9. See the Performance Data Manual for sensible and latent capacities.

ENERGY STAR

C SA US

Inverter

AHRI CERTIFIED® www.ahridirectory.org
Unitary Small HP
AHRI Standard 210/240
Certification applies only when the complete system is listed with AHRI.

For a complete list of available accessories, contact your LG representative.
For continual product development, LG reserves the right to change specifications without notice.

Job Name/Location: _____

LMU36CHV

Multi F Inverter Heat Pump Outdoor Unit

Tag No.: _____

Date: _____

PO No.: _____

[Unit : mm(inch)]

Gravity point

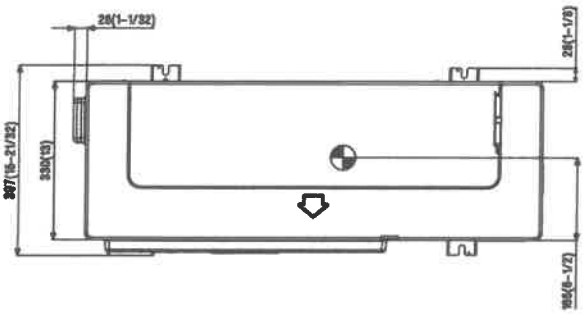

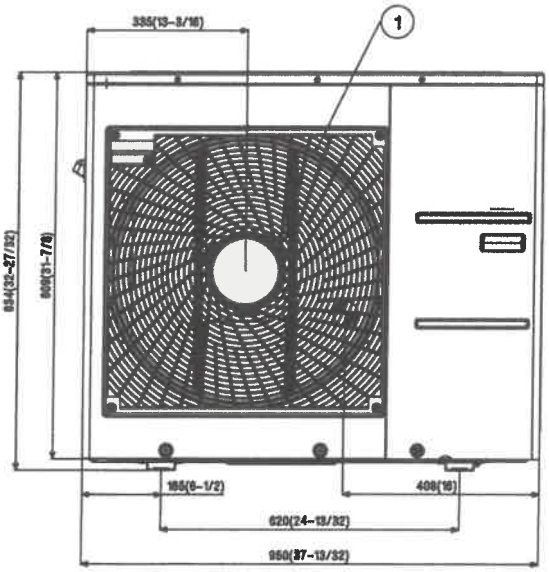

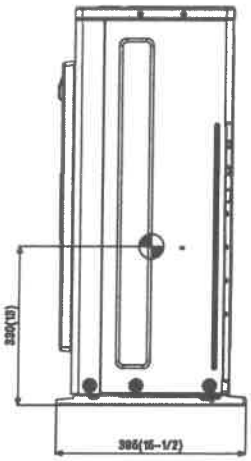

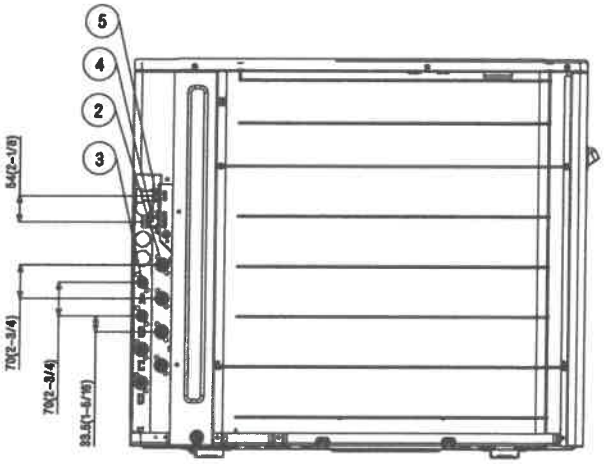

No.	Part Name
1	Air discharge grille
2	Vapor pipe connection
3	Liquid pipe connection
4	Main service valve (Liquid)
5	Main service valve (Vapor)

Notes:

1. Unit must be installed in compliance with the installation manual.
2. Unit must be grounded in accordance with the local or state regulations and applicable national codes.
3. All field-supplied electrical components and materials must comply with local, state, and national codes.
4. Electrical characteristics must be considered for electrical work and design. The capacity of power cable and circuit breaker for the outdoor unit must follow local, state, national, and manufacturer requirements.

Job Name/Location: **Tag No:**

Date:

PO No.:

For: ☐ File ☐ Resubmit ☐ Approval ☐ Other _____

Architect: **GC:**

Engr: **Mech:**

Rep:
(Company) (Project Manager)

LMU24CHV

Multi F Inverter Heat Pump Outdoor Unit

LG Life's Good

Performance:

Cooling Capacity (Min.-Rated-Max., Btu/h)	8,400~20,000~25,000
Heating Capacity (Min.-Rated-Max., Btu/h)	9,240~24,000~28,800
Max. Heating Capacity at 5°F (Btu/h)	14,595
Max. Heating Capacity at 0°F (Btu/h)	13,055
Max. Heating Capacity at -4°F (Btu/h)	10,385
Cooling COP @95°F (Rated)	3.71
Heating COP @47°F (Rated)	3.91

Cooling Nominal Test Conditions:
Indoor: 80°F DB / 67°F WB
Outdoor: 95°F DB / 75°F WB

Heating Nominal Test Conditions:
Indoor: 70°F DB / 60°F WB
Outdoor: 47°F DB / 43°F WB

Electrical:

Power Supply (V/Hz/Ø)[1]	208-230V, 60, 1
MOP (A)	20
MCA (A)	14.3
Recommended Fuse Size (A)	20
Cooling Rated Amps (A)	11.99
Heating Rated Amps (A)	11.99
Compressor (A)	9.4
Fan Motor (A)	0.59
Locked Rotor Amps (A)	N/A

MOP - Maximum Overcurrent Protection MCA - Minimum Circuit Ampacity

Piping:

Refrigerant Charge (lbs.)	3.97
Liquid Line Connection (in., O.D.)	1/4 x 3
Vapor Line Connection (in., O.D.)	3/8 x 3
Maximum Total Piping[2] (ft.)	246.1
Min. / Max. ODU to IDU Piping (ft.)	10.0 / 82.0
Piping Length (no add'l refrigerant, ft.)	73.8
Maximum Elevation between ODU and IDU (ft.)	49.2
Maximum Elevation between IDU and IDU (ft.)	24.6

ODU = Outdoor Unit IDU = Indoor Unit

Features:

- Auto operation
- Auto restart
- Inverter (variable speed compressor)
- Defrost / Deicing
- Restart delay (three [3] minutes)
- Self diagnosis
- Soft start
- Low ambient cooling down to 14°F

Optional Accessories:

☐ PI-485 - PMNFP14A1
☐ MultiSITE Comm. Mgr. - PBACNBTR0A
☐ AC Smart 5 - PACS5A000
☐ ACP 5 - PACP5A000
☐ Power Distribution Indicator (PDI)

Premium - PQNUD1S41
☐ Mobile LGMV - PLGMVW100
☐ Drain Pan Heater - PQSH1200
☐ Low Ambient Baffle Kit (Cooling operation to -4°F) - ZLABGP03A

Operating Range:

Cooling (°F DB)[3]	14 to 118
Heating (°F WB)	-4 to +64

Unit Data:

Refrigerant Type	R410A
Refrigerant Control	EEV
Sound Pressure (Cool / Heat) ±1 dB(A)[5]	49 / 52
Net / Shipping Weight (lbs.)	100 / 108
Heat Exchanger Coating	Gold Fin™
Minimum No. of Indoor Units	2
Maximum No. of Indoor Units	3

Compressor:

Type	Twin Rotary
Quantity	1
Oil / Type	FVC68D

Fan:

Type	Propeller
Quantity	1
Motor / Drive	Brushless Digitally Controlled/Direct
Max. Airflow Rate (CFM)	1,766

Notes:

1. Acceptable operating voltage: 187V - 253V.
2. Piping lengths are equivalent.
3. Sound pressure levels are tested in an anechoic chamber under ISO Standard 3745.
4. All power / communication cable to be minimum 14 AWG, 4-conductor, stranded, shielded or unshielded wire, and must comply with applicable local and national codes. If shielded, the wire must be grounded to the chassis at the outdoor unit only.
5. Power wiring size must comply with the applicable local and national codes.
6. This data is rated 0 ft. above sea level, with 25 ft. of refrigerant line, and 0 ft. level difference between outdoor and indoor units. All capacities are net with a combination ratio between 95 - 105%.
7. Must follow installation instructions in the applicable LG installation manual.
8. Refer to the Combintion Data Manual for combination capacity tables.
9. See the Performance Data Manual for sensible and latent capacities.

ENERGY STAR C US Inverter AHRI CERTIFIED® www.ahridirectory.org Unitary Small HP AHRI Standard 210/240 Certification applies only when the complete system is listed with AHRI

For a complete list of available accessories, contact your LG representative.
For continual product development, LG reserves the right to change specifications without notice.

Job Name/Location: _____

LMU24CHV

Multi F Inverter Heat Pump Outdoor Unit

Tag No.: _____

Date: _____

PO No.: _____

[Unit : mm(inch)]

Gravity point

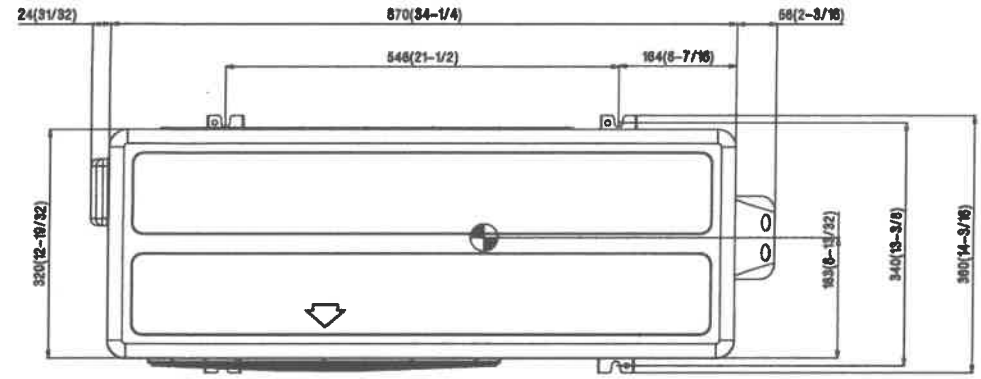

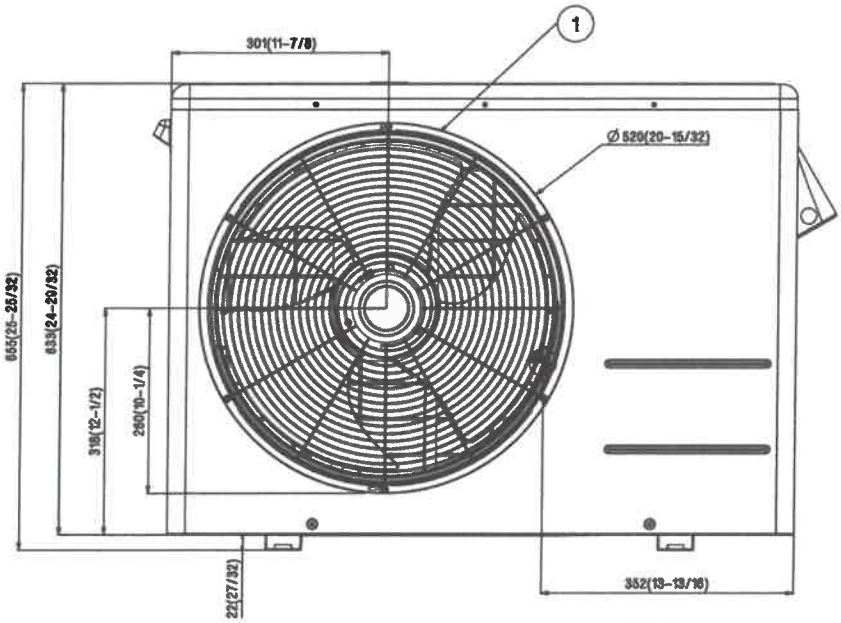

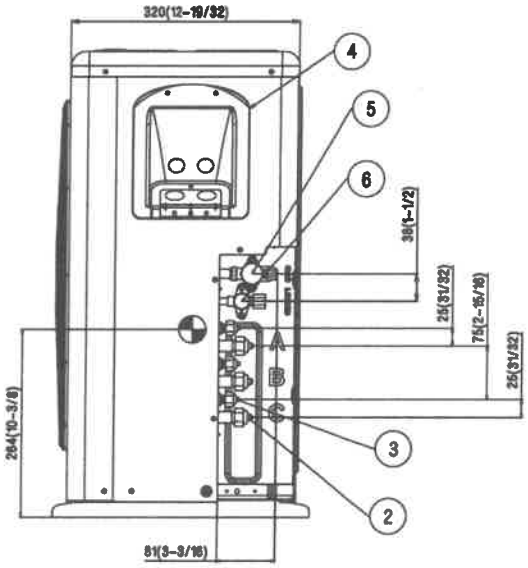

No.	Part Name
1	Air discharge grille
2	Vapor pipe connection
3	Liquid pipe connection
4	Power & transmission connection
5	Main service valve (Vapor)
6	Main service valve (Liquid)

Notes:

1. Unit must be installed in compliance with the installation manual.
2. Unit must be grounded in accordance with the local or state regulations and applicable national codes.
3. All field-supplied electrical components and materials must comply with the local, state, and national codes.
4. Electrical characteristics must be considered for electrical work and design. The capacity of power cable and circuit breaker for the outdoor unit must follow local, state, national, and manufacturer requirements.
5. For LMU18CHV Unit, ports A and B are available.
6. For LMU24CHV Unit, ports A, B, and C are available.


LG


WELCOME
LG


LG

The Laff's Air Conditioning System

1 message

<makomatt1@aol.com> Fri, Jul 23, 2021 at 5:22 AM
Reply-to: makomatt1@aol.com
To: marklaff@gmail.com <marklaff@gmail.com>
Cc: joan_bologna@conair.com <joan_bologna@conair.com>

To whom it may concern:

My name is Matt Errett and I live next door to Mark Laff. My address is 29 Fairmount Road in Goldens Bridge. We live in a condo complex, and our unit is attached to Mark's unit.

In regards to his air conditioning system..... although it is mounted right near our outside patio area, it is hardly noticeable, it emits very little noise, nor is it an eyesore. We have had no issues with it.

Thank you,
Matt Errett

4:01 87%

(914) 420-9702
Mobile

Barbara Colmer
2 White Birch Lane

3:21 PM

We don't have internet right now but I wanted to get back to you. We have no objection to your air conditioning system. We have never heard any noise from the system outside the house. And inside the house the air conditioning is very quiet. Let me know if this is sufficient. Barbara

Okay | Yes | Oh, okay

Type a message...

To: The Town of Lewisboro Zoning Board

Re: Air Conditioning Units installed by Sharon and Mark Laff on White Birch Lane in Goldens Bridge, New York

The noise level of the units is minimal and acceptable, and not an annoyance in any way.

Sandra Poderycki
6 White Birch Lane
Goldens Bridge, NY 10526

Ciorsdan Conran

From: Sirignano Law Office <lawoffice@sirignano.us>
Sent: Monday, July 19, 2021 12:28 PM
To: Ciorsdan Conran
Subject: Petrucelli

Ciorsdan,
Request is respectfully made for a further extension of the subdivision approvals granted in this application.
Thank you,
Michael

Michael Fuller Sirignano
Attorney and Counselor at Law
Old Post Road Professional Building
892 Route 35, PO Box 784
Cross River, NY 10518
Telephone: (914) 763-5500
Fax: (914) 763-9589

Westchester gov.com

George Latimer
County Executive

County Planning Board

December 6, 2019

Ciorsdan Conran, Planning Board Administrator
Town of Lewisboro
79 Bouton Road
South Salem, NY 10590

Dear Ms. Conran:

Thank you for the notification concerning the following proposed action:

Project Name/File Number: **Pound Ridge Stone — LEW 19-004**

Action: **Site Plan**

Location: **2 West Road**

We have no objection to the Lewisboro Planning Board assuming Lead Agency status for this review.

We have reviewed this matter under the provisions of Section 239 L, M and N of the General Municipal Law and Section 277.61 of the County Administrative Code and find this to be a matter for local determination in accordance with your community's planning and zoning policies.

Thank you for calling this matter to our attention.

Respectfully,
WESTCHESTER COUNTY PLANNING BOARD

By:

Norma V. Drummond
Commissioner

NVD/LH

432 Michaelian Office Building
148 Martine Avenue
White Plains, New York 10601 Telephone: (914) 995-4400 Website: westchestergov.com

RECEIVED BY

JUN 2 4 2021

Town Clerk
Town of Lewisboro

RESOLUTION
TOWN OF LEWISBORO
ZONING BOARD OF APPEALS

IN THE MATTER OF THE APPLICATION OF
Pound Ridge Stone
David Moorman
FOR A VARIANCE OF
ARTICLE IV §220-23E
CAL. NO. 13-21-BZ

INTRODUCED BY: **Board Member Casper**

SECONDED BY: **Board Member Rendo**

DATE OF CONSIDERATION/ADOPTION: **May 26, 2021**

WHEREAS, Pound Ridge Stone-David Moorman as the applicant(Two West Road LLC, owner of record) has made application to the Lewisboro Zoning Board of Appeals (the "ZBA"), on the subject premises located at, 2 West Road, South Salem, NY, Tax Map as Sheet 049B, Block 09831 Lot 001,("the property"),for a variance in the matter of the proposed 3'freestanding stonewall topped by a 3' solid wood fence surrounding the topsoil and sand storage that is located on the eastern side lot line whereas a minimum of 15' is required per Article III, Section 220-12E(2)C, and 3 freestanding signs whereas only 1 is permitted per Section 185-5(F)(1), a freestanding sign SN-1 that has an area of 19.5 square feet whereas 8 square feet is the maximum permitted per Section 185-5F(1)(a), the bottom edge of freestanding sign SN-1 is 2.5' above grade whereas a minimum of 7' is required per Section 185-6D(3), the relocation of freestanding sign SN-1 is 6' from the lot line whereas no part of any freestanding sign shall be located within 15' of any property line, except as otherwise permitted by this chapter per Section 185-6D(4), the freestanding sign SN-9 is 8' from the lot line whereas no part of any freestanding sign shall be located within 15' of any property line, except as otherwise permitted by this chapter per Section 185-6D(4), 4 canopy signs whereas only 1 is permitted per Section 185-5F(3)(b), the topsoil/sand storage area is open whereas storage of material must be enclosed per Section 220-24(D)(e)(d), and the proposed site coverage is 71.7% whereas 60% is the maximum per Article IV Section 220-24E of the Town of Lewisboro Zoning Code.

WHEREAS, this application for an area variance constitutes a Type II action under 6 NYCRR Part 617, and therefore, requires no further review under the State Environmental Quality Review Act (SEQRA), and

WHEREAS, a public hearing was held via the videoconferencing application Zoom (Meeting ID: 952 8133 2919) in this matter on May 26, 2021 and a site walk was conducted on May 22, 2021 to consider the application, after which a vote was taken with regard to the variance as set forth above, and

WHEREAS, The Lewisboro Zoning Board of Appeals has given careful consideration to the facts presented in the application at the public hearing based upon the criteria set forth in Section 267-b(3)(b) of the Town Law of the State of New York, and finds as follows:

1. The property is an approximate 0.70-acre parcel in GB, General Business District owned by Two West Road LLC and is improved with a two-story office building. The applicant wishes to construct a 3' freestanding stonewall topped by a 3' solid wood fence surrounding the topsoil and sand storage that is located on the eastern side lot line whereas a minimum of 15' is required Article III, Section 220-12E(2)C per of the Town of Lewisboro Zoning Code, thereby requiring a variance of 9', and 3 freestanding signs whereas only 1 is permitted per Section 185-5(F)(1), a freestanding sign SN-1 that has an area of 19.5 square feet whereas 8 square feet is the maximum permitted per Section 185-5F(1)(a), thereby requiring a variance of 11.5', the bottom edge of freestanding sign SN-1 is 2.5' above grade whereas a minimum of 7' is required per Section 185-6D(3), thereby requiring a variance of 4.5', 4 canopy signs whereas only 1 is permitted per Section 185-5F(3)(b), thereby requesting a variance for 3 canopy signs, the topsoil/sand storage area is open whereas storage of material must be enclosed per Section 220-24(D)(e)(d), and the proposed site coverage is 71.7% whereas 60% is the maximum per Article IV Section 220-24E of the Town of Lewisboro Zoning Code., thereby requesting a variance for 11.7% open storage area, the relocation of a freestanding sign SN-1 is 6' from the lot line whereas no part of any freestanding sign shall be located within 15' of any property line, except as otherwise permitted by this chapter per Section 185-6D(4), thereby relocating the sign to the 15' setback of the property line, the freestanding sign SN-9 is 8' from the lot line whereas no part of any freestanding sign shall be located within 15' of any property line, except as otherwise permitted by this chapter per Section 185-6D(4), thereby relocating the sign to the 15' setback of the property line.
2. There will be no undesirable change in the character of the neighborhood or detriment to nearby properties.
3. There is no practical alternative to the variance requested.
4. The Board found that the variance is not substantial.
5. There will not be an adverse effect or impact to the physical or environmental conditions of the neighborhood.
6. The Board found that the difficulty was not self-created.

WHEREAS, pursuant to Section 267-b(3)(c), the Zoning Board of Appeals hereby determines that the minimum area variance necessary in this application a variance of 9' whereas 15' is required for the 3' freestanding stonewall topped by a 3' solid wood fence surrounding the topsoil and sand storage that is located on the eastern side lot line, thereby permitting the construction of the 3' freestanding stonewall topped by a 3' solid wood fence 9' from the eastern lot line per Article III, Section 220-12E(2)C of the Town of Lewisboro Zoning Code.

WHEREAS, pursuant to Section 267-b(3)(c), the Zoning Board of Appeals hereby determines that the minimum area variance necessary in this application a variance consisting of

2 freestanding signs whereas 1 is permitted, thereby permitting the installation of 3 freestanding signs per Section 185-5(F)(1), of the Town of Lewisboro Zoning Code.

WHEREAS, pursuant to Section 267-b(3)(c), the Zoning Board of Appeals hereby determines that the minimum area variance necessary in this application a variance for 11.5 square feet whereas 8 square feet is permitted, thereby permitting the installation of the freestanding sign SN-1 with a 19.5' square feet per Section 185-5F(1)(a), of the Town of Lewisboro Zoning Code.

WHEREAS, pursuant to Section 267-b(3)(c), the Zoning Board of Appeals hereby determines that the minimum area variance necessary in this application a variance of 4.5' above grade whereas 7' is required, thereby permitting the installation of the freestanding sign SN-1 2.5' above ground per Section 185-6D (3), of the Town of Lewisboro Zoning Code

WHEREAS, pursuant to Section 267-b(3)(c), the Zoning Board of Appeals hereby determines that the minimum variance necessary in this application a variance of 3 canopy signs whereas 1 is permitted, thereby permitting the installation of 4 canopy signs, per Section 185-5F(1)(a), of the Town of Lewisboro Zoning Code

WHEREAS, pursuant to Section 267-b(3)(c), the Zoning Board of Appeals hereby determines that the minimum area variance necessary in this application a variance of 11.7% storage area, whereas 60% is permitted, thereby permitting 71.7% of enclosed topsoil/sand storage area. Article IV Section 220-24E of the Town of Lewisboro Zoning Code.

WHEREAS, pursuant to Section 267-b(3)(c), the Zoning Board of Appeals hereby acknowledges the relocation of freestanding sign SN-1 from the lot line of 6' whereas a sign is not permitted within 15' of any property line, thereby permitting the relocation or sign SN-1 15' from the property line. The Board acknowledges the relocation of freestanding sign SN-9 from the lot line of 8' whereas a sign is not permitted within 15' of any property line thereby permitting the relocation of sign SN-9 from the property line. per Section 185-6D (4), of the Town of Lewisboro Zoning Code.

NOW, THEREFORE BE IT RESOLVED, that the Lewisboro Zoning Board of Appeals hereby grants an area variance of 9' whereas 15' is required, thereby permitting the construction of the 3' freestanding stonewall topped by a 3' solid wood fence on the eastern side lot line per Article III, Section 220-12E(2)C of the Town of Lewisboro Zoning Code.

NOW, THEREFORE BE IT RESOLVED, that the Lewisboro Zoning Board of Appeals hereby grants an area variance for 2 freestanding signs whereas 1 is permitted, thereby permitting the installation of 3 freestanding signs per Section 185-5(F)(1), of the Town of Lewisboro Zoning Code.

NOW, THEREFORE BE IT RESOLVED, that the Lewisboro Zoning Board of Appeals hereby grants an area variance for 11.5 square feet whereas 8 square feet is permitted, thereby permitting the installation of freestanding sign SN-1 per Section 185-5F(1)(a), of the Town of Lewisboro Zoning Code.

NOW, THEREFORE BE IT RESOLVED, that the Lewisboro Zoning Board of Appeals hereby grants an area variance for 4.5' above grade whereas 7' is required, thereby permitting the installation of the freestanding sign SN-1 19.5 square feet per Section 185-6D (3), of the Town of Lewisboro Zoning Code

NOW, THEREFORE BE IT RESOLVED, that the Lewisboro Zoning Board of Appeals hereby grants an area variance for 3 canopy signs whereas 1 is permitted, thereby permitting the installation of 4 canopy signs, per Section 185-5F(1)(a), of the Town of Lewisboro Zoning Code

NOW, THEREFORE BE IT RESOLVED, that the Lewisboro Zoning Board of Appeals hereby grants an area variance11.7% storage area, whereas 60% is permitted, thereby permitting 71.7% of enclosed topsoil/sand storage area per Article IV Section 220-24E of the Town of Lewisboro Zoning Code.

NOW, THEREFORE BE IT RESOLVED, that the Lewisboro Zoning Board of Appeals hereby acknowledges the relocation of freestanding sign SN-1 from the lot line of 6' whereas a sign is not permitted within 15' of any property line, The Board acknowledges the relocation of freestanding sign SN-9 from the lot line of 8' whereas a sign is not permitted within 15' of any property line. per Section 185-6D (4), of the Town of Lewisboro Zoning Code.

VOTE:

Chairman Price	-	In Favor
Board Member Mandelker	-	In Favor
Board Member Casper	-	In Favor
Board Member Infield	-	In Favor
Board Member Rendo	-	In Favor

VOTE: Resolution carried by a vote of 5 to 0.

Robin Price, Jr., Chairman

Dated in South Salem, New York

This 23 day of May, 2021

Expiration: The variance shall deemed to authorize only the particular use or uses specified in the decision, and unless other provisions are set forth by the Zoning Board of Appeals in connection with its decision, shall expire if work is not initiated pursuant thereto within one (1) year of the date said decision is filed with the Office of the Town Clerk or if said use or uses shall cease for more than one (1) year. Applicants wishing to seek an extension are advised to make application therefore to the Zoning Board of Appeals sufficiently in advance of expiration so

as to allow their request for extension to be calendared and heard by the Zoning Board of Appeals prior to the date of expiration. Any such application must include a chronological listing of work (which may include efforts to obtain other regulatory approvals) initiated pursuant to the variance.

STATE OF NEW YORK)
) **ss.:**
COUNTY OF WESTCHESTER

I, Donna Orban, Secretary of the Zoning Board of Appeals, do hereby certify that the above is an excerpt/summary/fair representation of the Resolution adopted by the Zoning Board of Appeals of the Town of Lewisboro at a meeting of said Board on April 28, 2021.

Dated: June 28 2021

Donna Orban
Donna Orban
Secretary Zoning Board of Appeals

TOWN OF LEWISBORO

NOTICE OF PUBLIC HEARING

NOTICE IS HEREBY GIVEN that the Planning Board of the Town of Lewisboro, Westchester County, New York will convene a Public Hearing on August 17, 2021 at 7:30 p.m., or soon thereafter, at the Town Offices at 79 Bouton Road, South Salem, New York, regarding the following:

Cal #4-19PB, #17-19WP, #6-19SW

Application for Site Development Plan Approval, Special Use Permit Approval, Wetland Activity Permit and Stormwater Permit to Pound Ridge Stone, 2 West Road, South Salem, NY 10590, Sheet 49B, Block 9831, Lot 1 (Two West Road, LLC, owner of record) for construction of a 24' x 35' storage building, installation of 27 parking stalls, an outdoor material storage bin and outdoor display areas. The subject property consists of approx. 0.70 acres and is located in a General Business (GB) Zoning District.

A copy of materials and proposed site documents may be inspected at the office of the Planning Board Administrator, 79 Bouton Road, South Salem, New York during regular Planning Board hours. Persons wishing to object to the application should file a notice of objection with the Planning Board together with a statement of the grounds of objection prior to the closing of the Public Hearing. All interested parties are encouraged to attend the Public Hearing and all will be provided an opportunity to be heard.

PLANNING BOARD
TOWN OF LEWISBORO
By: Janet Andersen
Chair

Dated: July 23, 2021

The Town of Lewisboro is committed to equal access for all citizens. Anyone needing accommodations to attend or participate in this meeting is encouraged to notify the Administrator to the Planning Board in advance.


POUND RIDGE
STONE & LANDSCAPING INC
NOTICE
Please contact the Planning Board Secretary at
914-763-5592
for additional information
OFFICE
SPACE
FOR
RENT

KELLARD SESSIONS

John Kellard, P.E.
David Sessions, RLA, AICP
Joseph M. Cermele, P.E., CFM
Jan K. Johannessen, AICP

MEMORANDUM

TO: Chairperson Janet Andersen and
Members of Lewisboro Planning Board

CC: Ciorsdan Conran
Judson Siebert, Esq.
Joseph Angiello

FROM: Jan K. Johannessen, AICP
Joseph M. Cermele, P.E., CFM
Town Consulting Professionals

DATE: August 13, 2021

RE: Wetland Permit Approval
Jennifer Clark
68 East Ridge Road
Sheet 25, Block 10812, Lot 26

PROJECT DESCRIPTION

The subject property consists of ±3.3 acres of land located at 68 East Ridge Road and within the R-2A Zoning District. The property is developed with a single-family residence, gravel driveway, septic system and potable well. The applicant is proposing the construction of a three (3) car detached garage with a one (1) bedroom apartment on the second floor. A New York State Department of Environmental Conservation (NYSDEC) and Town jurisdictional wetland is located immediately to the west of the subject parcel and is proposed to be located within the State and Town regulated wetland buffer area. The subject parcel is located contiguous to the Old Field Preserve.

SEQRA

The proposed action has been preliminarily identified as a Type II Action and is therefore categorically exempt from the State Environmental Quality Review Act (SEQRA).

REQUIRED APPROVALS/REFERRALS

1. A Wetland Activity Permit is required from the Planning Board; a public hearing is required to be held on the Wetland Permit.

2. If the total amount of land disturbance exceeds 5,000 s.f., a Town Stormwater Permit will be required from the Planning Board.

3. The subject property is located within the NYC East of Hudson Watershed and if proposed land disturbance exceeds 5,000 s.f., coverage under the NYSDEC SPDES General Permit for Stormwater Discharges from Construction Activity (GP-0-20-001) will be required.

4. It appears that an Article 24 Freshwater Wetland Permit will be required from the NYSDEC.

COMMENTS

1. The application should be referred to the Building Inspector for review; we note that the applicant must demonstrate compliance with the Town's Accessory Apartment regulations (220-40 of the Zoning Code). The Building Department shall determine the need to refer the application to the Westchester County Department of Health (WCDH) for review of the proposed bedroom count and whether modifications or upgrades to the existing septic system are required.

2. Provide an updated survey (boundary, existing conditions, wetland boundary, trees, topography) of the subject property, signed and sealed by a Licensed Land Surveyor; we note that according to recent aerial imagery, there appears to be other outbuildings on the subject parcel that do not appear on the plan.

3. Efforts should be made to locate the proposed building outside of the wetland buffer or, at a minimum, further from the wetland boundary.

4. The name of the wetland scientist who performed the wetland delineation, and the date in which the delineation was performed, shall be noted on the plan. The applicant shall submit a Wetland Report, which shall contain the information required under Sections 217-7 (5) and (6) of the Town's wetland ordinance.

5. The applicant shall develop a wetland mitigation plan which provides, at a minimum, mitigation at a ratio of 1:1 (for every s.f. of wetland or wetland buffer disturbance proposed, an equal or greater amount of mitigation shall be provided). Reference is made to the Town's mitigation guidelines provided in Chapter 217, Appendix B.

6. On-site wetlands appear to be jurisdictional to the NYSDEC and the wetland boundary must be verified and validated by same. Please submit a wetland boundary map, including a fully executed copy of the NYSDEC Wetland Validation Block. The applicant shall coordinate with the NYSDEC regarding permitting requirements.

7. The plan shall be revised to identify the dimension between buildings/structures and the closest property line(s).

8. The plan shall illustrate the location of all existing and proposed utilities (electric, water, sewer, gas, etc.).

9. Provide construction details for proposed sanitary connection to existing septic tank.

10. The plan shall illustrate the location of the existing utilities (well, septic, etc.). Demonstrate that the minimum required Westchester County Department of Health (WCDH) separation distances to the septic system, well, structures, drainage improvements, etc., are maintained.

11. The plan shall illustrate and identify the location, specie type and diameter at breast height (dbh) of all trees with a diameter at breast height (dbh) of eight (8) inches or greater and located within the limits of disturbance and 25 feet beyond. Indicate trees to be removed and/or protected. If no trees are proposed to be removed, a note to this effect shall be added to the plan.

12. The plan shall illustrate and quantify the limits of disturbance (s.f.). The plan shall note that disturbance limits shall be staked in the field prior to construction.

13. The applicant shall prepare and submit a Stormwater Pollution Prevention Plan (SWPPP) prepared in compliance with Chapter 189, Stormwater Management and Erosion and Sediment Control, as well as the NYSDEC SPDES General Permit (GP-0-20-001) and the NYSDEC Stormwater Management Design Manual.

14. Include erosion control measures on the plan, including, but not limited to, temporary construction access, silt fence, inlet protection, tree protection, construction sequence, etc. Details shall be provided and shall be in conformance with the most recent version of the New York State Standards and Specifications for Erosion and Sediment Control.

15. The applicant shall perform deep and percolation soil testing in the vicinity of the proposed mitigation system to be witnessed by the Town Engineer. The test locations and results shall be shown on the plan. Contact this office to schedule the testing.

16. The applicant shall provide stormwater mitigation and design calculations for the runoff generated by the net increase in impervious surface for the 25-year, 24-hour storm event. Provide details of the stormwater mitigation system.

In order to expedite the review of subsequent submissions, the applicant should provide annotated responses to each of the comments outlined herein.

PLANS REVIEWED, PREPARED BY RODGER W. BRALEY ARCHITECT, DATED JUNE 2, 2021:

- Specifications (A100)
- Site Plan (A101)
- Plan (A102)
- Elevations (A103)
- Sections (A104 & A105)
- Typical Details (G100)

DOCUMENTS REVIEWED:

- Wetland Permit Application

JKJ/dc

https://kellardsessionsconsulti.sharepoint.com/sites/Kellard/Municipal/Lewisboro/Correspondence/2021-08-13_LWPB_Clark - 68 East Ridge Road_Review Memo.docx

TO: The Town of Lewisboro Planning Board

FROM: Lewisboro Conservation Advisory Council

SUBJECT: Clark Garage, 68 East Ridge Road, Waccabuc, NY 10597

DATE: August 12, 2021

The Conservation Advisory Council (CAC) has reviewed the materials submitted by the applicant for the construction of a garage with additional rooms including a bedroom, a laundry room and possibly a bathroom. The entire structure is within the 150 ft wetland buffer. There is also a driveway shown on the plans without mention of the material to be used.

The CAC has a would like to:

- Understand if the structure could be repositioned out of the buffer?
- Understand the impact on the septic system of adding an additional bedroom and the washing machine?
- See the material identified for the driveway
- See a wetland mitigation plan that meets the one-to-one criteria.
- See a stormwater prevention plan

Application No.: 59-21WP
Fee: $255 Date: 7/12/21
pd ck # 9772
escrow established
ck # 9773

TOWN OF LEWISBORO
WETLAND PERMIT APPLICATION

79 Bouton Road, South Salem, NY 10590
Phone: (914) 763-5592
Fax: (914) 875-9148

Project Address: 68 East Ridge Rd Waccabuc, NY 10597

Sheet: 25 Block: 10812 Lot(s): 26

Project Description (Identify the improvements proposed within the wetland/wetland buffer and the approximate amount of wetland/wetland buffer disturbance): GARAGE

Owner's Name: Jennifer Clark Phone: (914) 414-7191

Owner's Address: 68 East Ridge Rd Email: jennifer bclark@yahoo.com

Applicant's Name (if different): _____ Phone: _____

Applicant's Address: _____ Email: _____

Agent's Name (if applicable): _____ Phone: _____

Agent's Address: _____ Email: _____

TO BE COMPLETED BY OWNER/APPLICANT

What type of Wetland Permit is required? (see §217-5C and §217-5D of the Town Code)

☐ Administrative ☑ Planning Board

Is the project located within the NYCDEP Watershed? ☑ Yes ☐ No

Total area of proposed disturbance: ☑ < 5,000 s.f. ☐ 5,000 s.f. - < 1 acre ☐ ≥1 acre

Does the proposed action require any other permits/approvals from other agencies/departments? (Planning Board, Town Board, Zoning Board of Appeals, Building Department, Town Highway, ACARC, NYSDEC, NYCDEP, WCDOH, NYSDOT, etc): Identify all other permits/approvals required: _____

Note: Initially, all applications shall be submitted with a plan that illustrates the existing conditions and proposed improvements. Said plan must include a line which encircles the total area of proposed land disturbance and the approximate area of disturbance must be calculated (square feet). The Planning Board and/or Town Wetland Inspector may require additional materials, information, reports and plans, as determined necessary, to review and evaluate the proposed action. If the proposed action requires a Planning Board Wetland Permit, the application materials outlined under §217-7 of the Town Code must be submitted, unless waived by the Planning Board. The Planning Board may establish an initial escrow deposit to cover the cost of application/plan review and inspections conducted by the Town's consultants.

For administrative wetland permits, see attached Administrative Wetland Permit Fee Schedule.

Owner Signature: _____ Date: 7/9/2021

TOWN OF LEWISBORO PLANNING BOARD

79 Bouton Road, South Salem, NY 10590
Email: planning@lewisborogov.com
Tel: (914) 763-5592
Fax: (914) 875-9148

Affidavit of Ownership

State of: New York

County of: Westchester

Jennifer B Clark, being duly sworn, deposes and says that he/she resides at 68 East Ridge Road, Waccabuc NY 10597 in the County of Westchester, State of New York and that he/she is (check one) ✓ the owner, or ____ the _____
Title

of _____
Name of corporation, partnership, or other legal entity

which is the owner, in fee of all that certain log, piece or parcel of land situated, lying and being in the Town of Lewisboro, New York, aforesaid and know and designated on the Tax Map in the Town of Lewisboro as:

Block 10812, Lot 26, on Sheet 25.

Owner's Signature

Sworn to before me this

9 **day of** July, 2021

KAREN A GALASSO
Notary Public - State of New York
NO. 01GA6301751
Qualified in Westchester County
My Commission Expires Apr 21, 2022

Notary Public – affix stamp

Revised 2-2019

TOWN OF LEWISBORO PLANNING BOARD

79 Bouton Road, South Salem, NY 10590
Email: planning@lewisboronoy.com
Tel: (914) 763-5592 Fax: (914) 875-9148

Tax Payment Affidavit Requirement

This form must accompany all applications to the Planning Board.

Under regulations adopted by the Town of Lewisboro, the Planning Board may not accept any application unless an affidavit from the Town of Lewisboro Receiver of Taxes is on file in the Planning Board office. The affidavit must show that all amounts due to the Town of Lewisboro as real estate taxes and special assessments on the total area encompassed by the application, together with all penalties and interest thereon, have been paid.

Under New York State law, the Westchester County Clerk may not accept any subdivision map for filing unless the same type of affidavit from the Town of Lewisboro Receiver of Taxes is submitted by the applicant at the time of filing.

This form must be completed by the applicant and must accompany all applications to the Planning Board. Upon receipt, the Planning Board Secretary will send the form to the Receiver of Taxes for signature and notarization. If preferred, the applicant may directly obtain the signature of the Receiver of Taxes and notarization prior to submission.

To Be Completed by Applicant
(Please type or print)

Jennifer Clark
Name of Applicant

Clark Garage
Project Name

Property Description

Tax Block(s): 10812

Tax Lot(s): 26

Tax Sheet(s): 25

Property Assessed to:

Gerald F. Clark
Name

68 East Ridge Road
Address

Waccabuc NY 10597
City *State* *Zip*

The undersigned, being duly sworn deposes and says that a search of the tax records in the office of the Receiver of Taxes, Town of Lewisboro, reveals that all amounts due to the Town of Lewisboro as real estate taxes and special assessments, together with all penalties and interest thereon, affecting the premises described below, have been paid.

Signature - Receiver of Taxes: [signature] 6/8/2021
Date

Sworn to before me this

8th **day of** July, 2021

[signature]
Signature - Notary Public (affix stamp)

JANET L. DONOHUE
NOTARY PUBLIC, STATE OF NEW YORK
No. 01DO6259627
Qualified In Westchester County
Commission Expires April 16, 2020

SPECIFICATIONS

GENERAL CONDITIONS

1. Proposals accompanied by one set of the drawings from which bids were given, shall be submitted to the Owner on a date specified by the Owner. Drawings shall be signed by Contractor and the Owner and dated with date that contract is signed.

2. The Owner has the right to reject any and all bids.

3. The Contractor shall carefully examine the premises before submitting his bid. No allowances will be made for the lack of full knowledge of all conditions, except underground conditions, hidden utility lines within existing structure(s) if any, or other structural conditions, as are indeterminable before commencement ofwork.

4. The Contractor for each trade must state in his proposal to the general Contractor, the number of working days, from the signing of the contract, in which he will guarantee to complete his work. The Contractor will then provide the Owner with a proposed completion date.

5. It is understood that the Owner shall have the right during the progress of construction to make any alterations, additions or omissions that he may desire to work herein specified or on the drawings. If changes are made, the value of same must be agreed in writing by the owner, Architect and Contractor prior to the commencement of the extra work, or the deletion of work or change of material.

6. The Contractors shall furnish the Owner releases of lien before final payment is made.

7. The Contractor must bear full responsibility for loss or damage occasioned by neglect or accident, and shall provide to the Owner, written evidence that adequate insurance coverage is in effect for this project. Workman's Compensation Insurance certificates shall be provided by each Contractor prior to starting any work.

8. Figures on the drawings govern scale measurements, and larger scale governs smaller.

9. All questions or disagreements between the Owner and the Contractors relating to the interpretation of the drawings and specifications, or the kind or quality of the work and material, shall be referred to the Architect. His decision shall be final, conclusive and without appeal.

SITEWORK

1. All areas disturbed by the construction of this project indicated on the drawings shall be raked clean of all stones, organic material and construction debris, and shall be seeded with "Sun and Shade' seed, after being treated with slow release fertilizer. Seeded areas shall be protected with salt-hay after seeding. Other landscaping shall be installed per landscape drawings.

2. Any existing stone walls, or other built landscaping shall be protected from damage. Any damage shall be repaired at the Contractor's expense.

3. Fill material shall be placed in lifts not to exceed 8" and compacted to 98% standard proctor (ASTM D 698, Latest Edition) at optimum moisture content within a distance of 10'-0" beyond all footing edges. At least one field density test shall be performed for each 2500 square feet of area. Density tests are to be made 12" below the compacted surface.

******

CARPENTRY

1. Wood construction shall be in accordance with National Design Specifications for Stress Grade Lumber & Its Fastenings by the NFPA. Use construction details and minimum nailing specifications as required by the State Building Code.

2. All structural lumber for the project shall be Douglas Fir, with minimum FB of 875 PSI.

3. All lumber shall be stamped.

4. All sills shall be pressure treated wood placed on compressible sill sealer. Holes for sill bolts of other purposes to be sealed with coal-tar or other approved material.

5. Sills and girders supported on top of foundation walls or piers are to be leveled and grouted with portland cement grout.

6. All plywood for floor and roof sheathing shall be installed in accordance with APA specifications. Glue and nail sheathing to floor joists and roof trusses.

7. Double floor joists under bathtubs, washer and dryers, and under refrigerators.

8. Siding shall be as indicated on drawings, and shall match existing in size and quality, as well as method of installation. Fastenings shall be as indicated on the drawings.

9. All exterior sheathing shall be 1/ 2" CDX Plywood for both the roof and the walls, or compatible with the existing construction. Horizontal joints in exterior plywood sheathing to be supported on the blocking between studs. Vapor permeable water resistant building paper such as Tyvek is to be applied to all exterior wall sheathing.

10. Sub-flooring shall be 3/ 4" CDX Plywood screwed and glued (PL200) to floor joists. Floor levels shall match existing or as indicated on the drawings.

11. All trim shall be clear pine in the sizes indicated on the drawings, and shall be shapes and sizes to match existing or as indicated on the drawings.

12. In bearing walls or partitions, no stud is to be cut more than 1/ 3 its depth to receive piping, duct or electrical work.

13. All stud framing having an unsupported height of more than 10' is to have stud bridging or otherwise be braced in an approved manner at intervals not to exceed 8'.

14. All headers shall be 2 - 2"10" unless specified otherwise. In bearing walls, headers shall rest on double studs.

15. Wood framing shall be at least 8" above adjacent grade.

16. Provide double beams under partitions parallel to beams.

17. All multiple structural members (LVLs) must be bolted together with 1/ 2" lag bolts @16" O.C., staggered, minimum 2 inches from the edge.

THERMAL AND MOISTURE PROTECTION

1. Wall insulation shall be Fiberglass Batt insulation, with foil back (toward warm side) thickness and "R" value as indicated on drawings. Roof insulation shall be Fiberglass Batt insulation Batt, Kraft backing R-38. Maintain 1 1/ 2 inch air space above roof insulation. Floors over unheated spaces shall have R-38 insulation.

2. All walls to have R-21 fiberglass batt insulation with foil backing.

3. All hot and cold water piping shall have insulation wrapped at <u>all</u> locations including walls and ceiling spaces.

4. Use waterproof membrane flashing over all outside doors and windows.

6. All windows and doors at the exterior shall be sealed with silicone sealant, per manufacturers' recommendations.

7. Flashing to be provided at all roof penetrations, pipe vents, skylights, chimneys and roof ventilators. Flashing to be provided at hips, ridges, valleys, changes in roof slope, gable ends and top of foundation walls.

8. Shingles shall be Fiberglass type A 240 lb. <u>nailed</u> to sheathing.

WINDOW AND DOOR

1. All dimensions are for Marvin windows. If another manufacturer is selected, all openings for doors and windows shall be coordinated with the Architect prior to their being ordered. All windows and exterior doors are to be shop primed. It is the Contractor's responsibility to coordinate with the Owner and Architect as to what windows will be provided, and what corresponding rough openings will be prior to erection. Any of the following window manufacturers may be used:

Anderson
Marvin
Pella
Weathershield

2. All windows shall include insulated glass and all operable windows and doors shall be provided with screens.

3. All interior doors shall be prehung wood doors and shall be provided with 1 1/ 2 pair butts per door. Hardware other than hinges, shall be as specified.

4. Glass in exterior doors, shower doors and enclosures and bathtub doors and enclosures shall be tempered, and shall meet all applicable codes.

CONCRETE

1. Concrete shall have the following minimum ultimate compressive strengths at the end of 28 days (minimum air dry weight to be 112 lbs per cubic foot):

Slabs on grade	3,500 psi	3 1/ 2" Slump
Footings	3,000 psi	5" slump
Foundation walls	3,000 psi	4" slump
Lightweight concrete	3,000 psi	85 pcf
Masonry mortar	3,000 psi	Type M

2. No water shall be added to concrete mix at the job site without the approval of the engineer. A water-reducing agent,subject to the engineer's approval, may be used to improve the workability and reduce shrinkage.

3. Calcium chloride admixtures or chloride salt shall NOT be used.

4. Minimum aggregate size shall be 3/ 4". All aggregates shall conform to ASTM C-33. All concrete shall be consolidated through use of mechanical vibrators.

5. Adequate vertical and horizontal shoring shall be provided to safely support all construction loads. All structural concrete is to be cured in accordance with ACI 318-83 Sec. 5.5. Slab shall be cast on 6 mil vapor barrier.

6. All concrete work and details shall conform to the latest edition of the "Building Code" requirements for reinforced concrete of the ACI (ACI 318-2016). Test cylinders shall be furnished at a rate of four (4) for each fifty (50) CY of concrete. All foundation walls and floors in contact with ground to be furnished with an anti-hydro admixture per manufacturer's specifications.

7. All footings shall bear on compact, undisturbed unfrozen soil having a minimum safe bearing capacity of 1.5 tons per SF, or on compacted fill at least 95% by Proctor Test.

8. Ambient air temperature of contact soil and air must be minimum 40 degrees F. There may be NO freezing temperature within the first 24 hours, and all forms must be left in place for minimum 72 hours. Air entrained concrete must be used conforming to ASTM C-94.

9. Backfilling may be completed when foundation walls have been completed and the first floor construction is in place, but no sooner than seven days after completion of foundation walls.

10. All slabs on grade to be done in panels limited to 1,800 SF in Area. Coordinate layout and elevations of all underground utilities prior to placing of footings or foundations.

11. Columns, beams wall or any other structural member penetrating slabs shall be isolated by remolded joint fillers (1/ 2" thick) complying with ASTM D 1752 type 1.

12. Minimum concrete protection of reinforcing shall be 3/ 4": on slabs, 1 1/ 2" on walls, 3" infootings, and 2" for concrete exposed to earth or weather.

13. Concrete for sidewalks, exterior pads, stairs, etc., shall be 3,500 psi stone concrete 4% air entrained minimum. Concrete walls and columns shall be temporarily braced against earth pressure, wind, and other forces until slabs, beams or columns designed to brace the finished structure are in place.

SPECIALTIES AND EQUIPMENT

1. All Bathroom countertops shall be as indicated on the drawings, with cut-outs for sinks as indicated in the Plumbing Fixture Schedule.

2. All Kitchen countertops shall be plastic laminate with beveled edges, as indicated on the drawings, with cut-outs for sink and drop in cook-top, and other equipment as required.

3. Kitchen cabinets shall be constructed with all solid wood cabinets with solid wood doors and drawers. Cabinets shall be as manufactured by Plato Woodwork, Inc., Plato, Mn., or approved equal. Fronts shall be selected by Owner. All cabinet shelving shall be solid wood, 5/ 8" thick minimum.

4. Kitchen equipment shall be provided as indicated on the drawings.

5. Chimney outlets shall not be lower than the top of any window within 15' or less than 2' above any combustible part of the roof within 10'.

ELECTRICAL

1. All electrical work shall comply with all local, State and National codes.

2. All switches, outlets, cover plates, etc. shall match.

3. All light fixtures shall be manufactured by Progress or as approved by the Architect.

4. All wire shall be copper of proper wire gauge.

PLUMBING

1. The plumbing installation and materials shall be in conformance to all local and state codes.

2. All materials shall be new, of first quality and without defects. All electrical equipment shall be UL listed.

3. All work under this contract shall be guaranteed against defects in workmanship and or materials for a minimum period of one year from the date of installation.

4. The Contractor shall examine the building site, make his own measurements and determine exact location of all utilities, sewers, services, etc., and obtain such other information as may be necessary to satisfy himself as to the conditions under which the work is to be performed, before entering into this contract. Failure to determine existing conditions, limitations, etc., shall not be considered a basis for the granting of additional compensation. By submitting a bid, the Contractor represents that he has accomplished all the preceding requirements.

5. The word "Provide" as used in these notes and on the plans, and in the specifications, shall mean "Furnish and Install".

6. Provide a complete soil, waste and vent sanitary system as shown on the drawings and as required by codes. Installation shall conform to plumbing code. All fixtures and drains shall be trapped and vented.

7. Provide complete cold and hot domestic water system as shown on the drawings. Connect system to new water service.

8. Contractor shall pay all fees, charges, etc. to all agencies, city/ town departments and utility companies for plumbing installation.

9. All plumbing fixtures and water serviced equipment shall be individually valved. Water piping system shall be provided with valves to give complete regulating control over system.

10. Provide cleanouts as per plumbing codes.

11. Flash all vents through roof with 4# lead or lead-copper turned down 3" into top of pipe.

13. All risers shall be erected plumb and true. All horizontal runs of piping shall be installed as straight and direct as possible, forming right angles or parallel lines with the building walls.

14. All installed plumbing piping shall be tested by the Contractor and accepted by applicable agency.

15. Tests shall be in accordance to Plumbing Code and as further required by building officials and utility companies.

16. Water piping shall be tested to one and one-half times pressure which exists in water connection.

17. Provide and connect up complete, all fixtures and other fittings shown on the plans. Unless otherwise specified, all exposed metal parts are to be chromium plated brass. All supply valves shall have renewable seats. All handles to be metal. Mounting heights to be verified with the Architect.

18. All fixtures are to be set level and square with relation to interior finish, floor and wall lines, and toilet room fixtures will be placed equi-distant and at the same height from floor as required by the particular layout for these rooms. The Architect's interior finish drawings shall be followed in locating all fixtures.

19. Provide drainage piping above and underground consisting of no-hub cast iron soil pipe fittings conforming to C.I.S.P.I. 301, and joint connections conforming to C.I.S.P.I. 310 of approved types. Pipe, fittings, joints, and installation of same shall be in conformance to all local and state codes. Alternate sch PVC and Sch 80 under traffic areas.

20. In general, all tubing shall be hard tempered, seamless copper water tube, ANSI H 23.1, with pressure rated ANSI B 16, wrought copper solder joint fittings.

21. Service and type: Underground...Type "K" soft temper
Aboveground...Type "L" hard temper

22. Solder used for joints shall be 95-5 type conforming to ASTM B32. All joint surfaces shall be cleaned by approved procedure. Am approved flux shall be applied, then solder fed into joint after heating joint to proper temperature so the solder flows properly. All residue on exterior of joint shall be removed.

23. All valves shall be pressure rated Class 125, bronze, solder ends type as manufactured by "Stockham Co." or equivalent.

24. Hose bibs (HB) shall be bronze with vacuum breakers on hose spout similar to "Woodford" #24P. Provide hose bibs on each side of house.

25. Fresh air inlet shall be Jay R. Smith #9005 or equal.

26. Pipe hangers shall be clevis or adjustable swivel ring band types complete with hanger rods, nuts etc., and with proper structural attachments.

27. Banding iron, wire, chain or rope shall not be permitted.

28. Hanger spacing, support spacing etc. shall be as stipulated in Plumbing Code.

29. Insulation: All cold and hot water piping and fittings shall be insulated with sectional closed cell PVC insulation.

30. Pipe Sleeves: Provide metal sleeves where pipes pass through walls and floors. Seal space between pipe and sleeve with approved UL listed silicone foam sealant.

FINISHES

1. All exterior siding and trim shall be painted to match sample color. All Soffits shall be given a prime coat and two coats of flat exterior enamel.

2. All interior walls shall be 1/ 2" gypsum board screwed to wood studs and rafters, and shall be taped and spackled by the same installer. All gypsum board in bathrooms and kitchen shall be waterproof type. Gypsum board in shower and tub areas shall be "Wonder-Board". Gypsum board walls and ceilings are to receive a prime coat and two coats of off white latex, color to be selected by the Owner.

3. The bases of all bathrooms are to be of glazed tiles. Floors shall be of ceramic tile 4"x4" and installed per Tile Manufacturers instructions. All grout shall be white.

4. All wood floors are to be sealed and finished with two coats of varnish. Where patches are placed in existing wood floors, patches shall match existing floors in wood type, direction and installation, and finish.

5. All bedrooms, bedroom closets, that are to receive carpet, shall have proper underlayment material, such as homosote 1/ 2" thick, prior to installing carpet. Carpet shall be provided and installed by company dealing strictly in carpet and its installation.

6. Walls and ceilings in rooms that are created or are existing in which work is performed, shall be prepared for painting to ensure a smooth wall finish. One coat of sealer shall be applied as well as two coats of premium quality latex paint by Benjamin Moore. Color shall be selected by Owner.

7. All wood trim and doors shall have all nails set and puttied, and one coat of sanding sealer and two coats of oil based enamel applied. Sand between coats to ensure a smooth finish. be UL listed.
Unions shall be of the ground joint type.

SEAL

REGISTERED ARCHITECT
RODGER W. BRALEY
013852
STATE OF NEW YORK

RODGER W. BRALEY ARCHITECT
50 PLATSHILL RD.
NEWTOWN, CONNECTICUT 06470
(203) 426-9918

PROJECT

Clark Garage
68 East Ridge Road, Waccabuc, NY

TITLE

Specifications

REVISION	DESCRIPTION
DATE	

SCALE	1/ 8" = 1'-0"
DATE	6-2-21
DWN. BY	RD
COMMISION NO.	

SHEET

A100

SHEET A100 OF

Zoning Table

Zone 2A

Lot Area 3.3073 Ac 144,068 SF
Lot #2 Block 26
Land Use Sfr

Item	Reqired	Provided
Min Lot Size	2 Ac	3.3073 Ac
Min Lot Width	200'	300' + (Varies)
Min Front Yard	50'	130 + (to new construction)
Min Side Yard	40'	60'
Min Rear Yard	50'	190' (to Existing Dwelling)
Max Bldg Hgt	2 1/2 stories/ 35'	2 stories/ 30'
Max Bldg Cover	9%	2.5%

Existing dwelling	2,177 SF
Existing Shed	366 SF
Proposed Garage/ Apt	1,122 SF
Total SF	3,665 SF / 144,068 SF = 2.5%

Max Bedrooms in Accessory Apt 2 Allowed 1 Proposed
per 220-40-B (1)
Number of Bedrooms in existing dwelling 2
Septic designed andbuilt for 3. No change required

3 ZONING TABLE
1 1/ 2" = 1'-0"

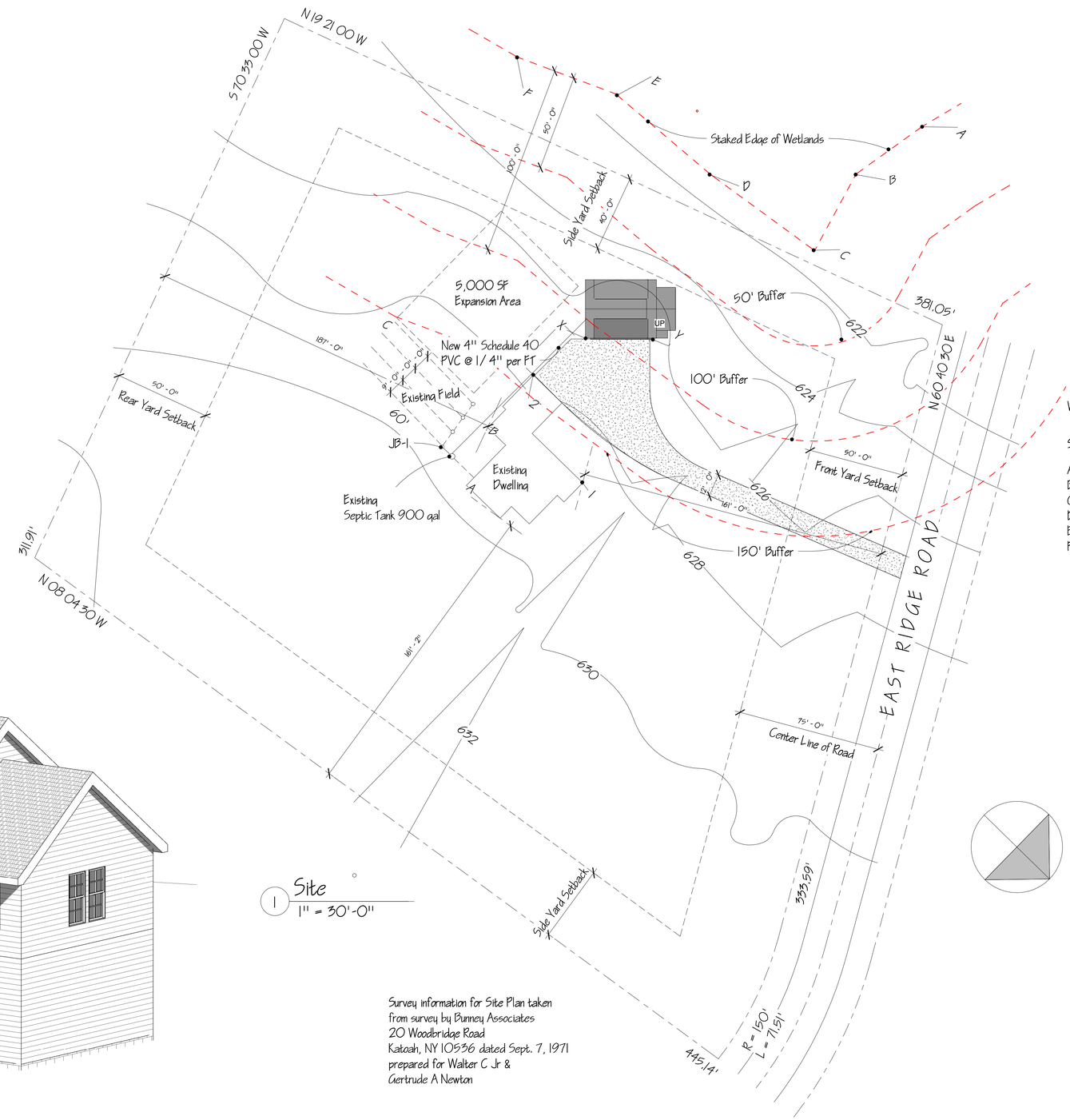

1 Site
1" = 30'-0"

WETLAND STAKE OFFSETS

Stake	1	2 (Corners of existing house)
A	258	242
B	216	199
C	171	161
D	175	140
E	204	153
F	226	167

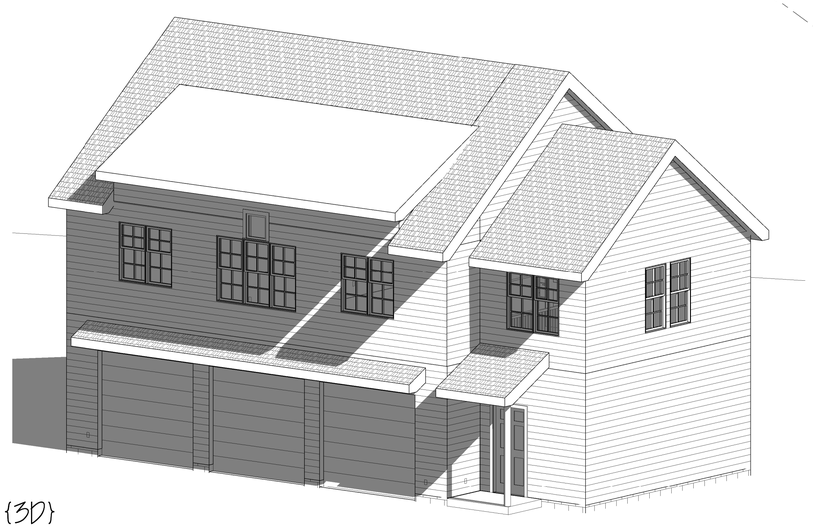

2 {3D}

Survey information for Site Plan taken
from survey by Bunney Associates
20 Woodbridge Road
Katoah, NY 10536 dated Sept. 7, 1971
prepared for Walter C Jr &
Gertrude A Newton

SEAL

REGISTERED ARCHITECT
RODGER W. BRALEY
013832
STATE OF NEW YORK

RODGER W. BRALEY ARCHITECT
50 PLATTSHILL RD.
NEWTOWN, CONNECTICUT 06470
(203) 426-9918

PROJECT

Clark Garage
68 East Ridge Road, Waccabuc, NY

TITLE

Site Plan

REVISION DATE	DESCRIPTION
1-7-21	Wetland Info 150' buffer

SCALE	As indicated
DATE	6-2-21
DWN. BY	RB
COMMISION NO.	RD

SHEET

A101

SHEET A101 OF

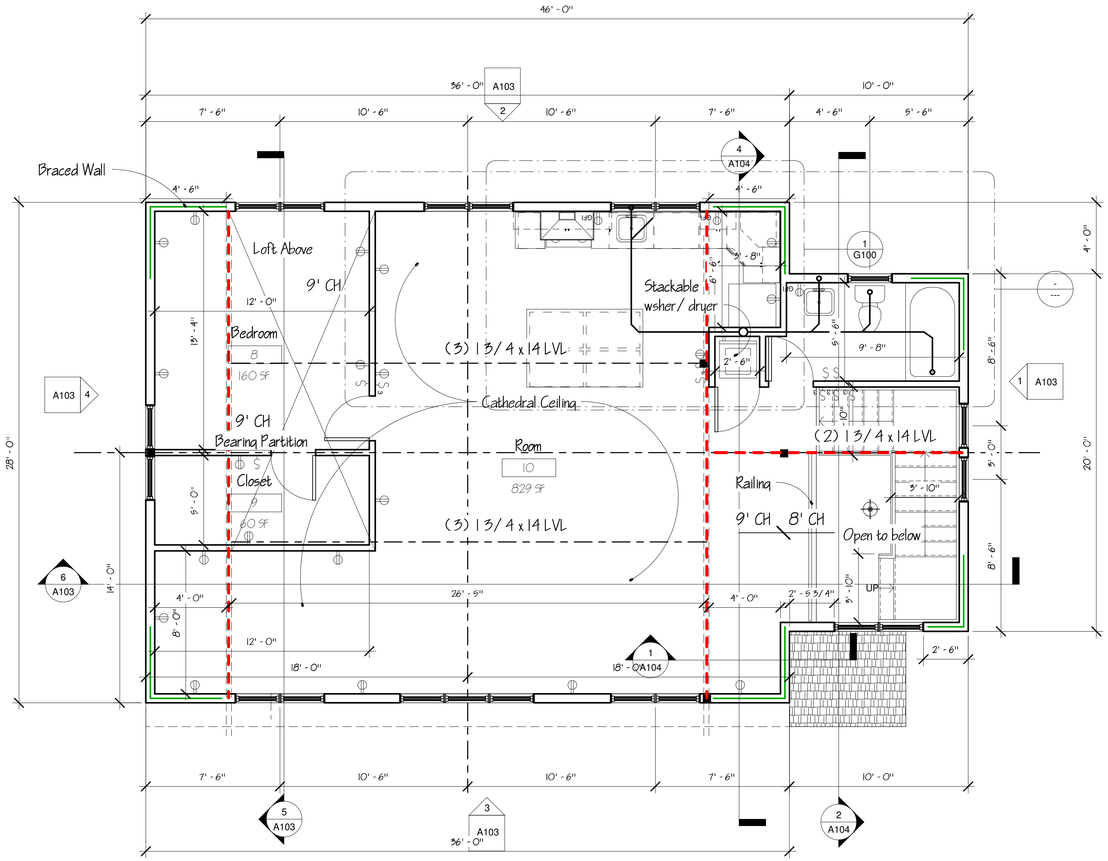

2 Level 2
1/ 4" = 1'-0"

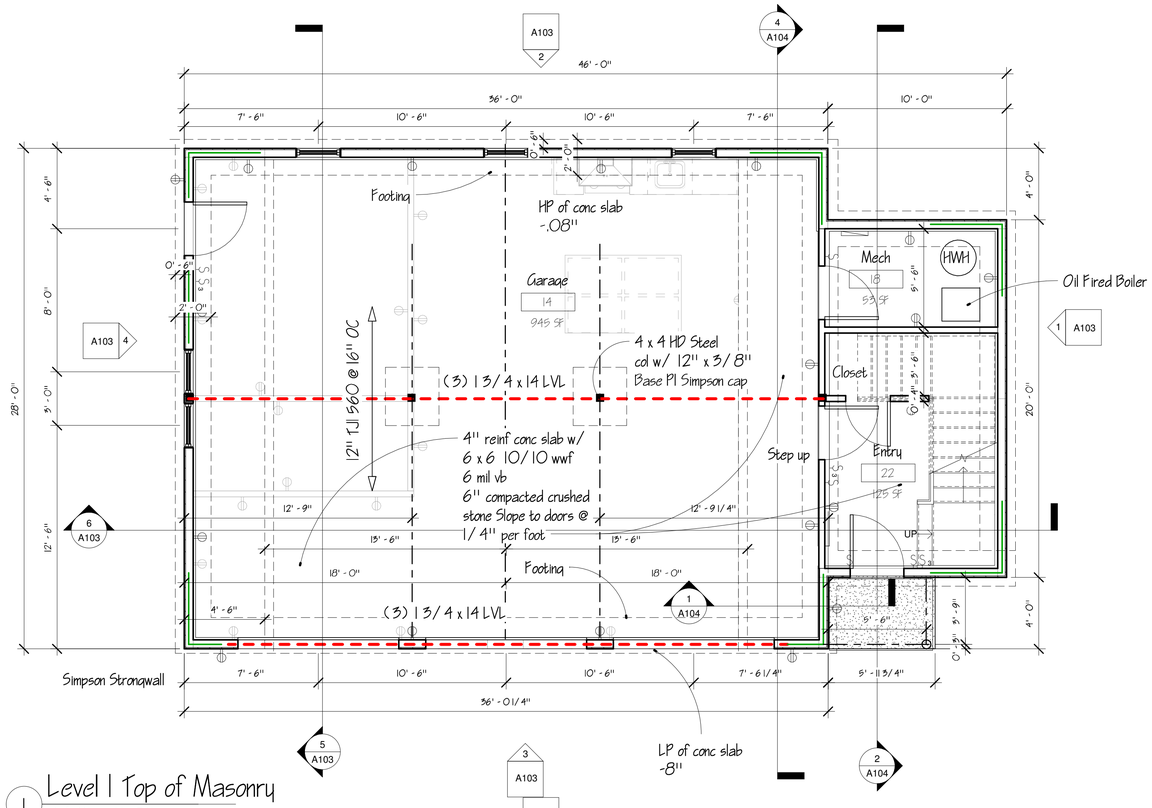

1 Level 1 Top of Masonry
1/ 4" = 1'-0"

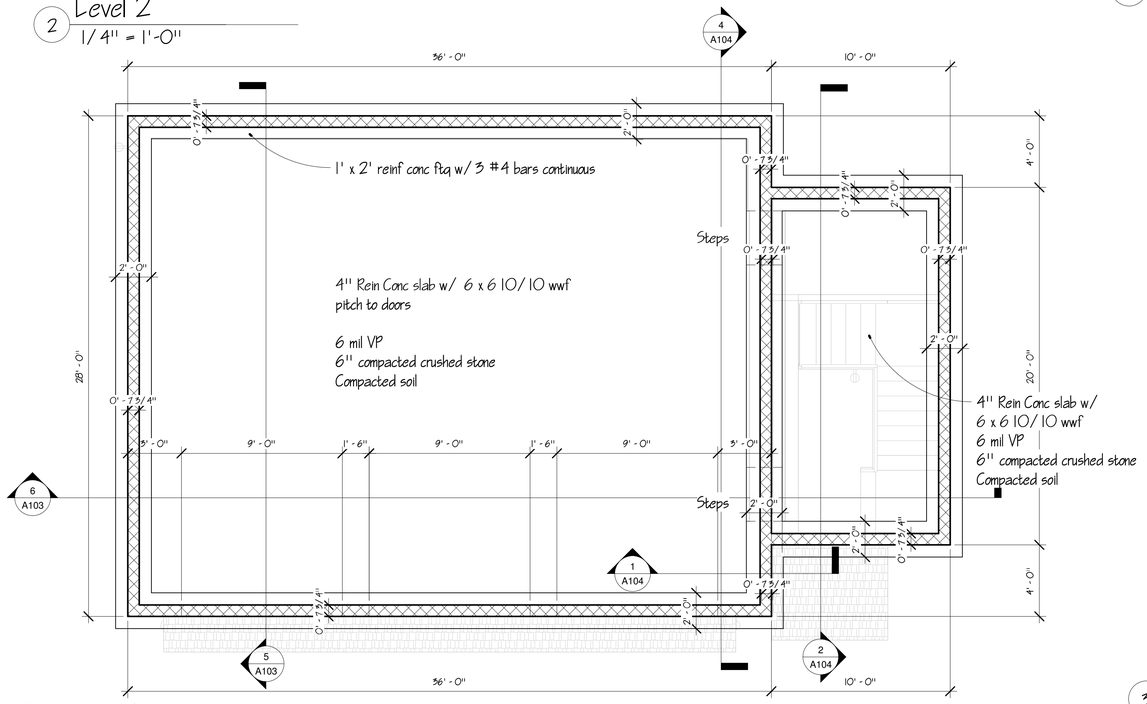

4 Bottom of Footing
1/ 4" = 1'-0"

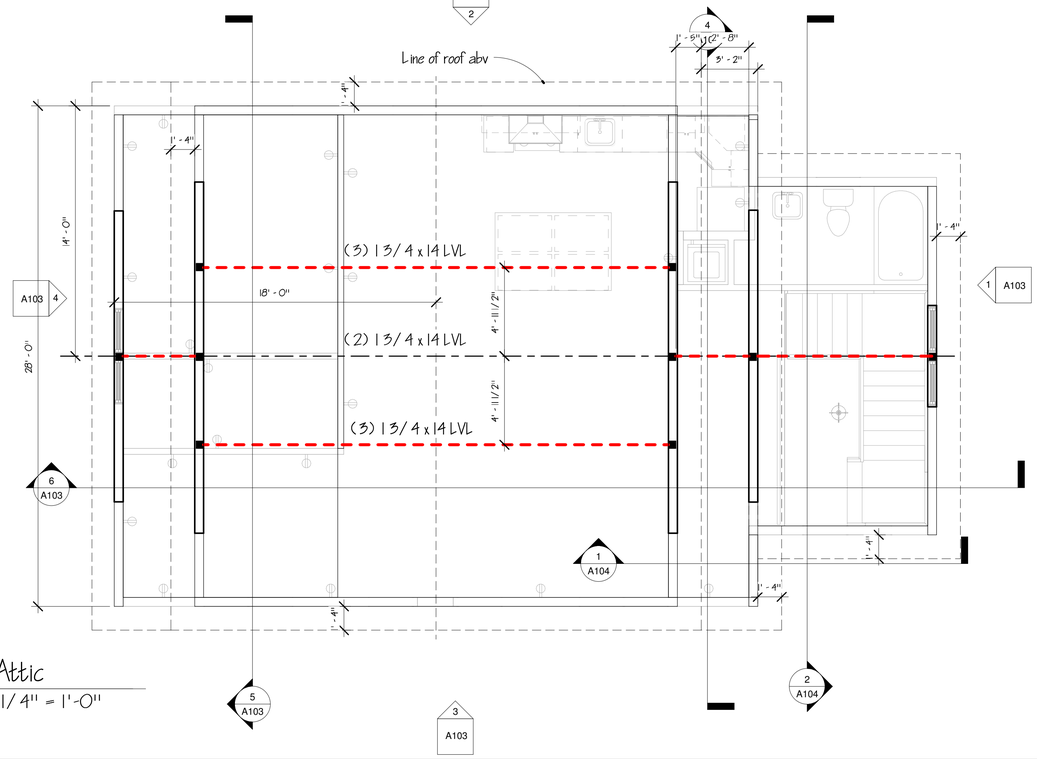

3 Attic
1/ 4" = 1'-0"

SEAL
RODGER W. BRALEY
013892
STATE OF NEW YORK

RODGER W. BRALEY ARCHITECT
50 PLATSHILL RD.
NEWTOWN, CONNECTICUT 06470
(203) 426-9918

PROJECT
Clark Garage
68 East Ridge Road, Waccabuc, NY

TITLE
Plan

REVISION DESCRIPTION
DATE

SCALE 1/ 4" = 1'-0"
DATE 6-2-21
DWN. BY RB
COMMISION NO. RB

SHEET
A102

SHEET A102 OF

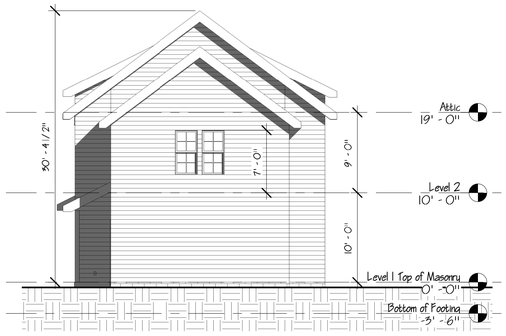

1 East
1/8" = 1'-0"

2 North
1/8" = 1'-0"

3 South
1/8" = 1'-0"

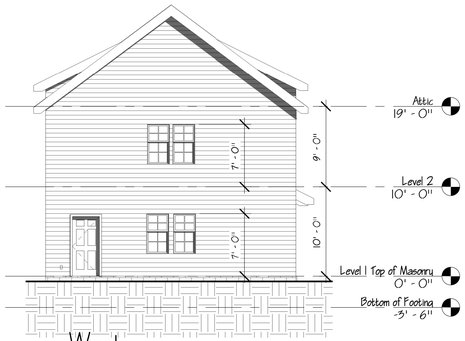

4 West
1/8" = 1'-0"

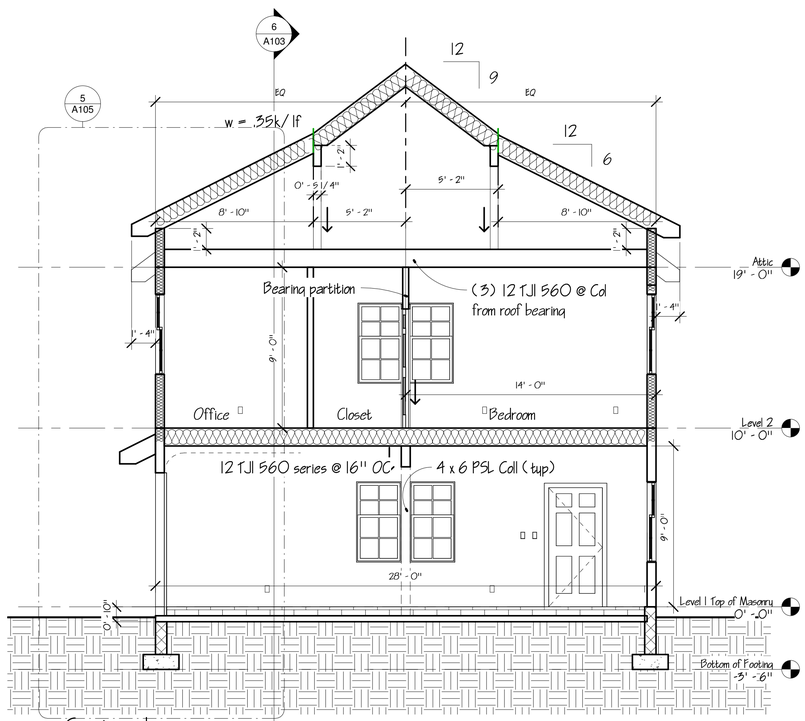

5 Section 1
1/4" = 1'-0"

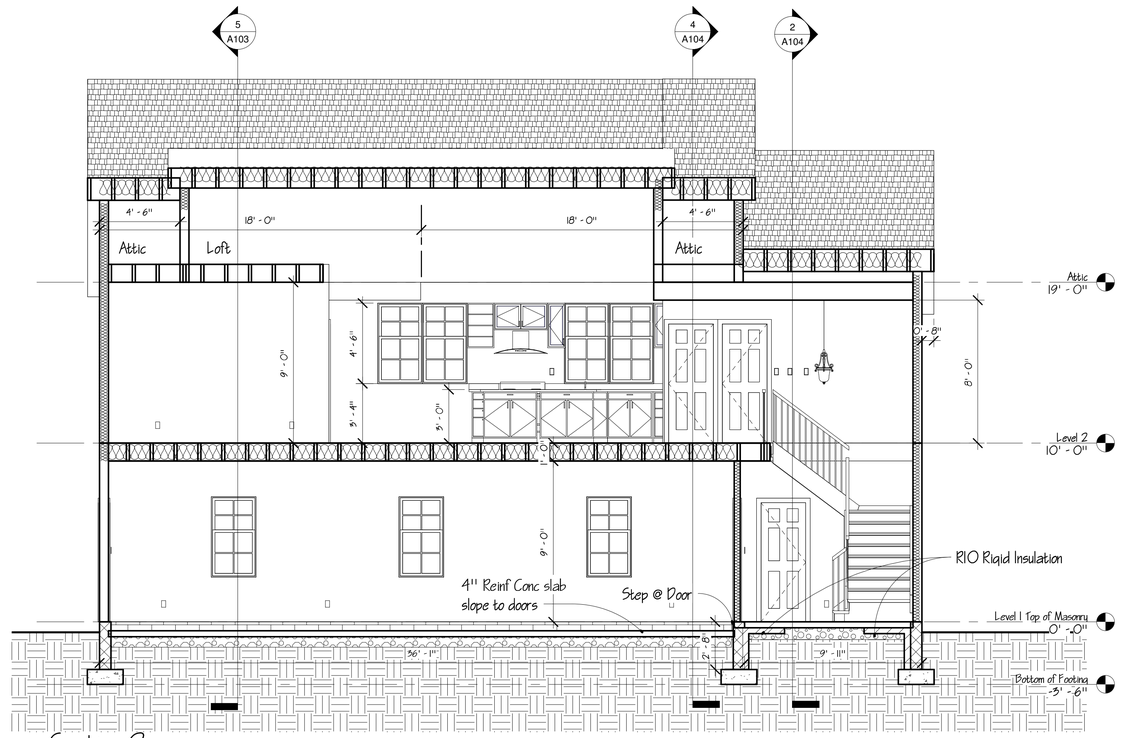

6 Section 2
1/4" = 1'-0"

SEAL

RODGER W. BRALEY ARCHITECT
50 PLATSHILL RD.
NEWTOWN, CONNECTICUT 06470
(203) 426-9918

PROJECT

Clark Garage
68 East Ridge Road, Waccabuc, NY

TITLE

Elevations

REVISION DATE	DESCRIPTION

SCALE	As indicated
DATE	6-2-21
DWN. BY	RB
COMMISION NO.	RD

SHEET

A103

SHEET A103 OF

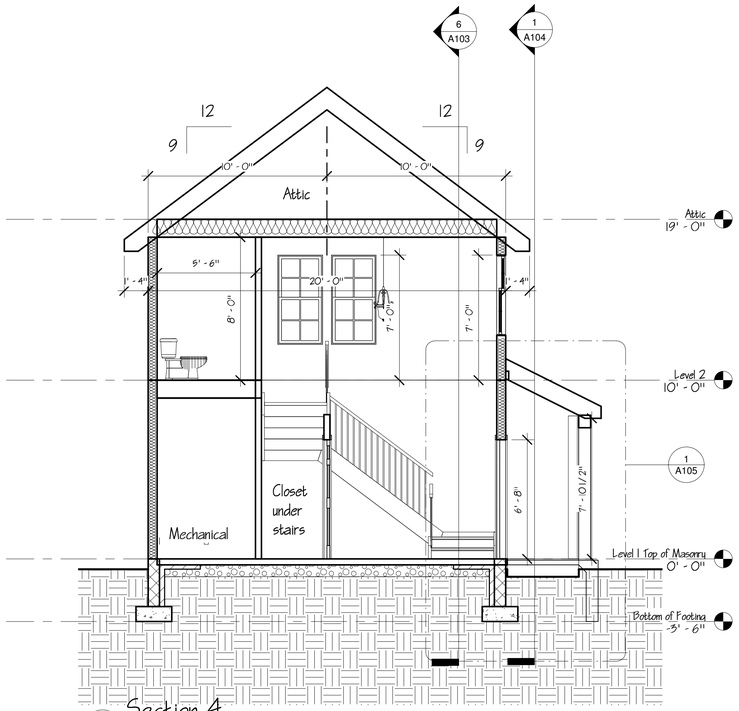

2 Section 4
1/4" = 1'-0"

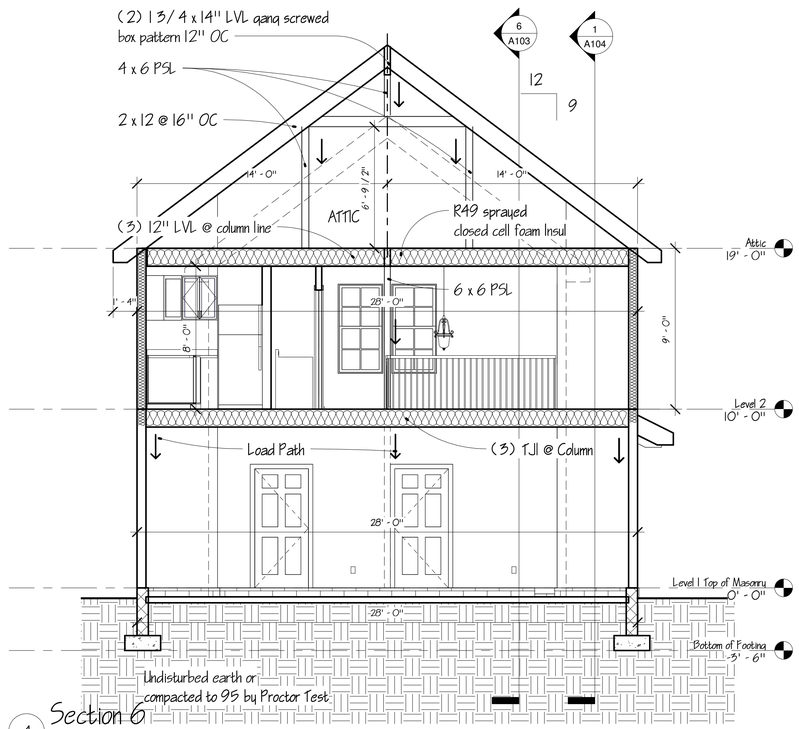

4 Section 6
1/4" = 1'-0"

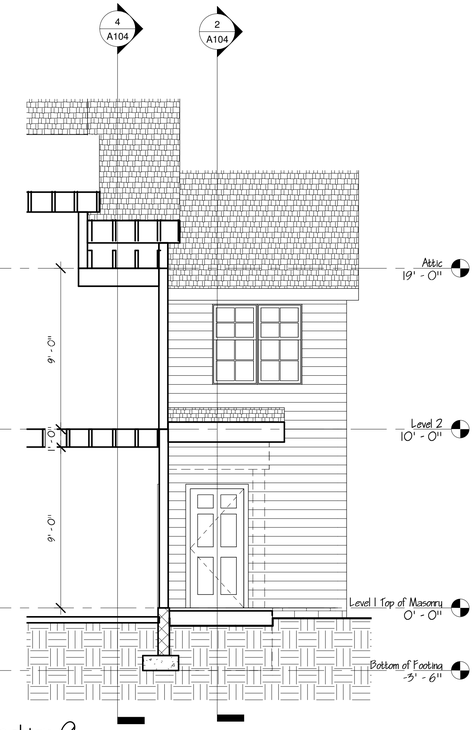

1 Section 9
1/4" = 1'-0"

SEAL

RODGER W. BRALEY ARCHITECT
50 PLATSHILL RD.
NEWTOWN, CONNECTICUT 06470
(203) 426-9918

PROJECT

Clark Garage
68 East Ridge Road, Waccabuc, NY

TITLE

Sections

REVISION DATE	DESCRIPTION

SCALE	1/4" = 1'-0"
DATE	6-2-21
DWN. BY	RB
COMMISION NO.	RB

SHEET

A104

SHEET A104 OF

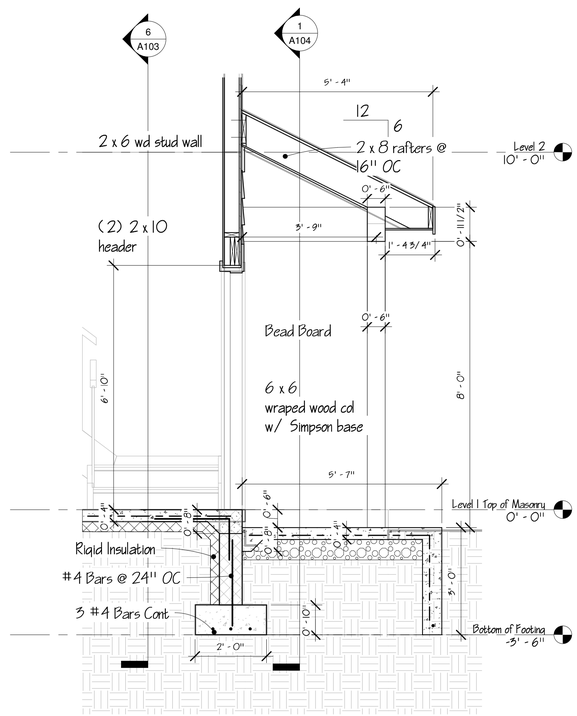

1 Section 4 - Callout 1
1/ 2" = 1'-0"

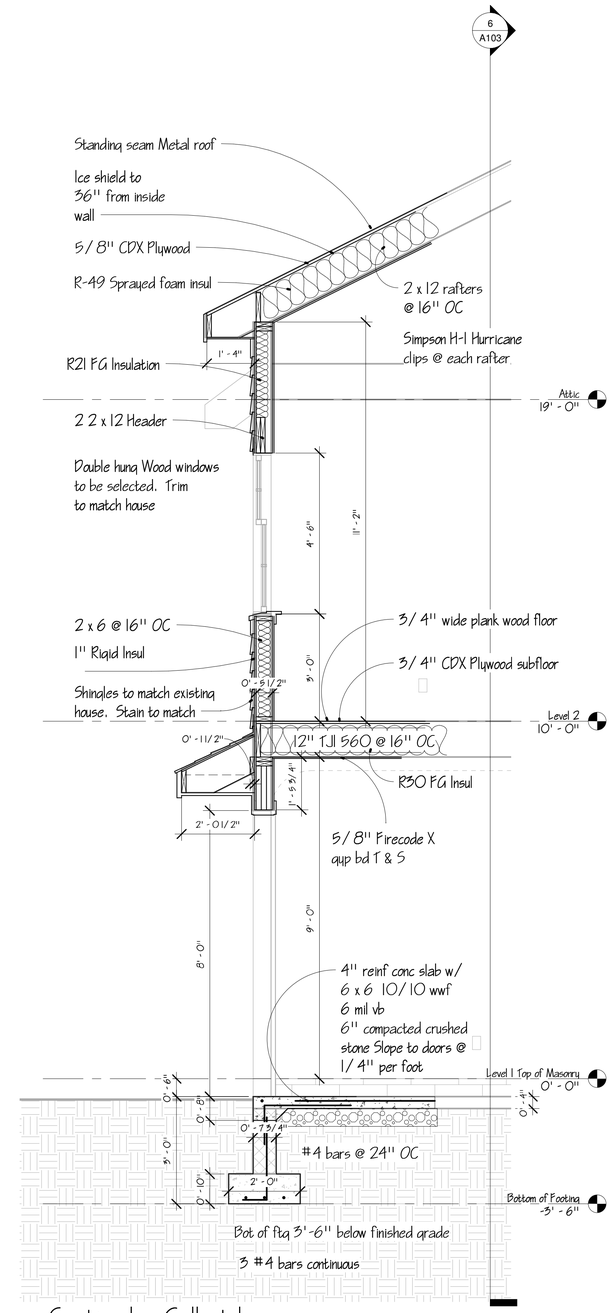

5 Section 1 - Callout 1
1/ 2" = 1'-0"

SEAL

RODGER W. BRALEY ARCHITECT
50 PLATTSHILL RD.
NEWTOWN, CONNECTICUT 06470
(203) 426-9918

PROJECT

Clark Garage
68 East Ridge Road, Waccabuc, NY

TITLE

Sections

REVISION DATE	DESCRIPTION

SCALE	1/ 2" = 1'-0"
DATE	6-2-21
DWN. BY	RB
COMMISION NO.	RD

SHEET

A105

SHEET A105 OF

2 3D View 1

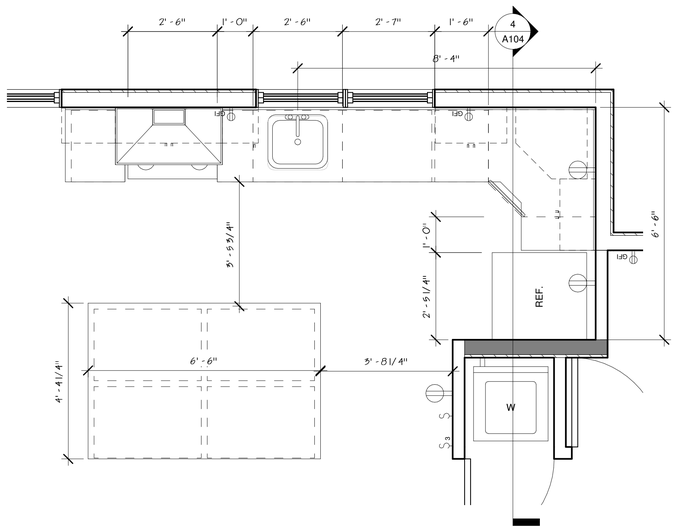

1 Level 2 - Kitchen
1/2" = 1'-0"

Installation Details

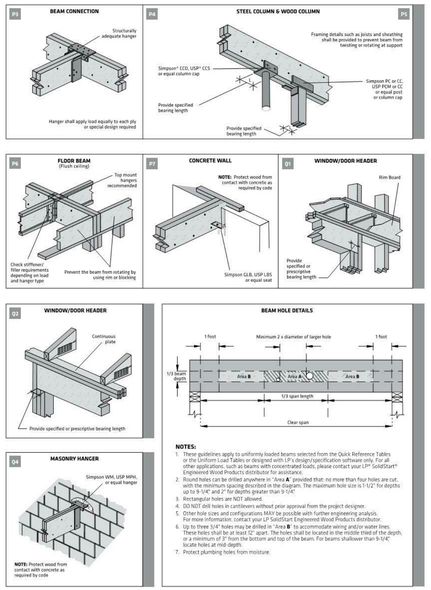

NOTES:

1. These guidelines apply to uniformly loaded beams selected from the Quick Reference Tables or the Uniform Load Tables or designed with LP's design/specification software only. For all other applications, such as beams with concentrated loads, please contact your LP® SolidStart® Engineered Wood Products distributor for assistance.
2. Round holes can be drilled anywhere in "Area **A**" provided that: no more than four holes are cut, with the minimum spacing described in the diagram. The maximum hole size is 1/12" for depths up to 9-1/4" and 2" for depths greater than 9-1/4".
3. Rectangular holes are NOT allowed.
4. DO NOT drill holes in cantilevers without prior approval from the project designer.
5. Other hole sizes and configurations MAY be possible with further engineering analysis. For more information, contact your LP SolidStart Engineered Wood Products distributor.
6. Up to three 1/4" holes may be drilled in "Area **B**" to accommodate wiring and/or water lines. These holes shall be at least 12" apart. The holes shall be located in the middle third of the depth, a minimum of 1" from the bottom and top of the beam. For beams shallower than 9-1/4", locate holes at mid-depth.
7. Protect plumbing holes from moisture.

LVL Connection Details
1/8" = 1'-0"

Connection Details

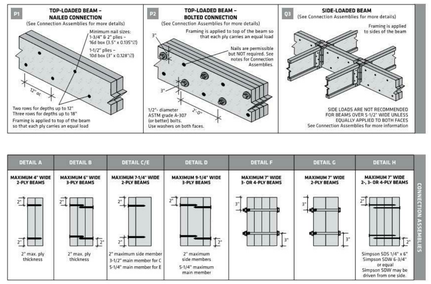

UNIFORM SIDE-LOAD CAPACITY (PLF)

Connection Detail	2 Rows of Nails at 12" oc	3 Rows of Nails at 12" oc	2 Rows of 1/2" Bolts at 24" oc	2 Rows of 1/2" Bolts at 12" oc
A	412	618	506	1012
B	309	464	380	760
C	309	464	522	1044
D	275	412	464	928
E	275	412	464	928
F	na	na	337	674
G	na	na	818	1376
H	Refer to Simpson Strong-Tie® catalog for SDS & SDW installation requirements & capacities.			

NAIL SCHEDULE

Nail Length (in)	Nail Diameter (in)	Lateral Load Capacity (lbs)	Nail Size Factor	Nail Type
3-1/2"	0.162	141	1.37	16d common
	0.135	103	1.00	16d box
3-1/4"	0.144	118	1.15	16d sinker/12d common
	0.128	93	0.90	12d box
	0.120	81	0.79	Power-driven nail[1]
3"	0.148	99	0.96	10d common
	0.128	81	0.84	10d box
	0.120	81	0.79	Power-driven nail[1]

NOTES:

1. The Uniform Side-Load Capacity values are the maximum load that can be applied to either side of the beam, based on the selected connection detail, and represent loads applied uniformly such as joists supported by hangers spaced 24" oc or less. Connections for discrete point loads may be determined with this table by calculating the equivalent fastener schedule within a 2' length centered about the point load. Details **B** and **D** shall have the back ply connected with a number of nails equal to half that used to connect the front ply – see the Side-Load Connection Example and detail on page 23. All nail and bolt spacing requirements shall be verified. The full length of the beam shall be connected with the standard connection or with the appropriate uniform side-load connection from this table. The beam shall be designed to support all applied loads.
2. Values are for normal load duration and shall be adjusted according to code.
3. The Uniform Side-Load Capacity for nails are based on Douglas Fir lumber (from Nail Schedule) are based on Douglas Fir lumber equivalence (SG = 0.50) for a 16d box (3-1/2" x 0.135"@) nails for 3-1/4" LVL. For other nail sizes, multiply the Uniform Side-Load Capacity by the Nail Size Factor from the Nail Schedule. For 1-1/2" LVL, multiply by the Nail Size Factor for the appropriate 3" nail. Higher capacities may be calculated using the equivalent specific gravities tabulated in the Fastener Design table on page 23.
4. The values for the Uniform Side-Load Capacity for bolts are based on Douglas Fir lumber equivalence (SG = 0.50) for ASTM grade A-307, 1/2"@ bolts, for loads applied perpendicular-to-grain. For 1-1/2" LVL, multiply these values by 0.86 or calculate for the needed detail. Higher bolt capacities may be calculated using the equivalent specific gravities tabulated in the Fastener Design table on page 23.
5. For nails at 8" oc, multiply the capacity by 1.5. For nails at 6" oc, multiply the capacity by 2. For four rows of nails, double the two-row capacity.
6. Use 2 rows of nails for depths to 12" Use 3 rows of nails for depths greater than 12" up to 18".
7. Unless specifically designed, use 3-1/2" nails for 1-3/4" and 2" thick plies and use 3" nails for 1-1/2" thick plies. If the nails do not fully penetrate the second ply (main member), then the nails shall be driven from both faces.
8. For detail **A** or when attaching the first two plies for detail **B** (and optionally for details **F** and **H** - see note 11), the nails may be driven all from one face or alternating from both faces. If the nails do not fully penetrate the second ply, then the nails shall be driven from both faces.
9. When driving nails from each face, alternate every other nail in each row.
10. For details **C** and **E**, when side-loaded, the larger side-load shall be applied to the thicker ply (main member).
11. For details **F** and **H**, it is permissible to nail the plies together before bolting or driving Simpson SDS or SDW (or equal) screws. Nail two plies together (see note 8) then nail one additional ply to each side.
12. Beams wider than 5-1/2" shall be top-loaded or side-loaded from both sides to prevent rotation. For side loads applied to one side of a beam only, the project designer shall verify torsional capacity or detail the beam to prevent rotation due to any side loads. Consult a design professional for other options.
13. Power-driven nails shall conform to ICC-ES report ESR-1539 (International Staple, Nail and Tool Association) for power-driven staples and nails.
14. Other nail, screw or bolt configurations are possible. Refer to the Fastener Design table on page 21 or contact your LP® SolidStart® Engineered Wood Products distributor.

Connection Details

FASTENER DESIGN

Equivalent Specific Gravity					
Nails Only		Nails and Wood Screws		Bolts and Lag Screws	
Without-wood		Dowel Bearing		Dowel Bearing (into the face only)	
Edge	Face	Edge	Face	Load Applied Parallel to Grain	Load Applied Perpendicular to Grain
0.46	0.50	0.52	0.50	0.46	0.50

NOTES:

1. The equivalent specific gravity for each connection type listed above is for normal load duration and shall be adjusted according to code.
2. Fastener spacing, end and edge distance shall be as specified by code except for nail spacing as specified below.
3. See details to right for fastener and applied load orientation.

FASTENER & LOAD ORIENTATION

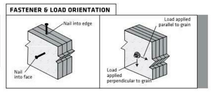

NAIL SPACING REQUIREMENTS

LVL Ply Thickness	Fastener Orientation[1]	Common Nail Size[4]	Minimum End Distance	Minimum Nail Spacing
≥ 1-1/2"	Edge	8d & smaller	2-1/2"	4"
		10d & 12d	2-1/2"	4"[2]
		16d[5]	3-1/2"	5"
	Face	8d & smaller	1-1/2"	3"
		10d & 12d	1-1/2"	3"
		16d[5]	1-1/2"	5"

NOTES:

1. Edge distance shall be such that does not cause splitting.
2. Multiple rows of nails shall be offset at least 1/2" and staggered.
3. Edge orientation refers to nails driven into the narrow edge of the LVL, parallel to the face of the veneers. Face orientation refers to nails driven into the wide face of the LVL, perpendicular to the face of the veneers. (See Fastener & Load Orientation details above.)
4. For box nails, the end distance and minimum spacing of the next shorter nail may be used.
5. 16d sinkers (3-1/4" x 0.148"@) can be spaced the same as the 10d & 12d nails.

SIDE-LOAD CONNECTION EXAMPLE

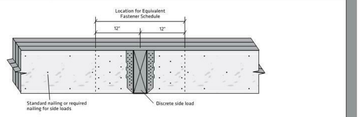

EXAMPLE: Assuming a properly designed 3-ply 14" beam, determine the equivalent connection to support a 3300 lb point load applied to the side of the beam.

SOLUTION:

1. Determine the equivalent PLF load over the 2' length by dividing the applied load by 2: 3300 lb / 2' = 1650 plf
2. Divide the equivalent PLF load by the capacity for the appropriate detail. For a 14" depth, 3 rows of nails are required. For Detail **B** with 3 rows of nails at 12" oc: 1650 plf / 464 plf = 3.6
3. The required total number of nails is 3.6 * 3 rows of nails @ 12" oc = 10.8 nails per foot
4. Connect the front (loaded) ply with the nailing determined in step 3: drive 11 16d box nails within 12" to each side of the point load (a total of 22 nails). Verify nail spacing.
5. Connect the back ply with half the number of nails determined in step 4: drive 6 16d box nails, from the back, within 12" to each side of the point load (a total of 12 nails). Verify nail spacing.
6. Connect full length of member with the standard nailing or as required for side loads.
7. Project designer shall detail to prevent rotation of the beam due to the applied side load.

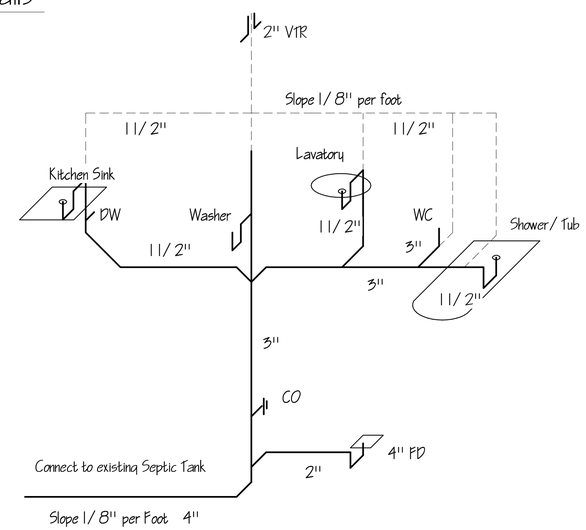

3 Plumbing Riser Diagram
1/2" = 1'-0"

Table 2. General Nailing Schedule

Joint Description	Number of Common Nails	Number of Box Nails	Nail Spacing
Roof Framing			
Blocking to Rafter (Toe-nailed)	2- 8d	2-10d	each end
Rim Board to Rafter (End-nailed)	2-16d	3-16d	each end
Wall Framing			
Top Plates at Intersections (Face-nailed)	4-16d	5-16d	at joints
Stud to Stud (Face-nailed)	2-16d	2-16d	24" o.c.
Header to Header (Face-nailed)	16d	16d	16" o.c. along edges
Floor Framing			
Joist to Sill, Top Plate or Girder (Toe-nailed) (Fig. 14)	4- 8d	4-10d	per joist
Blocking to Joist (Toe-nailed)	2- 8d	2-10d	each end
Blocking to Sill or Top Plate (Toe-nailed)	3-16d	4-16d	each block
Ledger Strip to Beam or Girder (Face-nailed)	3-16d	4-16d	each joist
Joist on Ledger to Beam (Toe-nailed)	3- 8d	3-10d	per joist
Band Joist to Joist (End-nailed) (Fig. 14)	3-16d	4-16d	per joist
Band Joist to Sill or Top Plate (Toe-nailed) (Fig. 14)	2-16d	3-16d	per foot
Roof Sheathing			
Wood Structural Panels			
rafters or trusses spaced up to 24" o.c.	8d	10d	6" edge / 6" field
gable endwall rake or rake truss w/o gable overhang	8d	10d	6" edge / 6" field
gable endwall rake or rake truss w/ structural outlookers	8d	10d	6" edge / 6" field
gable endwall rake or rake truss w/ lookout blocks	8d	10d	4" edge / 4" field
Ceiling Sheathing			
Gypsum Wallboard	5d coolers	-	7" edge / 10" field
Wall Sheathing			
Wood Structural Panels			
studs spaced up to 24" o.c.	8d	10d	6" edge / 12" field
1/2" and 25/32" Fiberboard Panels	8d[1]	–	3" edge / 6" field
1/2" Gypsum Wallboard	5d coolers	–	7" edge / 10" field
Floor Sheathing			
Wood Structural Panels			
1" or less	8d	10d	6" edge / 12" field
greater than 1"	10d	16d	6" edge / 6" field

[1] Corrosion resistant 11 gage roofing nails and 16 gage staples are permitted, check IBC for additional requirements.

Nails. Unless otherwise stated, sizes given for nails are common wire sizes. Box and pneumatic nails of equivalent diameter and equal or greater length to the specified common nails may be substituted unless otherwise prohibited.

SEAL

RODGER W. BRALEY ARCHITECT
50 PLATSHILL RD.
NEWTOWN, CONNECTICUT 06470
(203) 426-9918

PROJECT

Clark Garage
68 East Ridge Road, Waccabuc, NY

TITLE

Typical Details

REVISION	DESCRIPTION	DATE

SCALE	As indicated
DATE	6-2-21
DWN. BY	RB
COMMISION NO.	RD

SHEET

G100

SHEET G100 OF

TOWN OF LEWISBORO
Westchester County, New York

Building Department
79 Bouton Road
South Salem, New York 10590

Tel: (914) 763-3060
Fax: (914) 875-9148
Email: jangiello@lewisborogov.com

August 9, 2021

Ms. Janet Andersen, Chair
Town of Lewisboro Planning Board

Re: Cal#47-21WP, Cal#09-21SW
Beresford, 253 Silver Spring Rd., sheet 0052, block 10058, lot 02

Dear Ms. Andersen and Members of the Board,

I have reviewed the plans from Luigi DeMasi, Architect dated 10/23/2020, plans from Robert Roseli, P.E. dated 12/15/20 and survey from Paul A. Rowan dated 4/9/2020 as well as the memo from Jan K. Johannessen, AICPI and Joseph M. Cermele, P.E. dated 7/15/2021. I agree with the comments from our Town Consulting Professionals and will not repeat them here. I have the following comment:

1. A driveway profile has not been provided, but the proposed driveway appears to have a code compliant grade. Care should be taken not to exceed the maximum permitted grade of 14% per Article V Section 195-24A.

Please do not hesitate to contact me with any questions.

Sincerely,

Joe Angiello
Building Inspector

Ciorsdan Conran

From: Deirdre Casper
Sent: Monday, July 26, 2021 4:27 PM
To: Elliott, John; DBMC-NY-WHTPL-E911@one.verizon.com; Brown, Hope; Woodason, Dan; william.a.wascak@usps.gov
Cc: Diane Crocker; Lise Robertson; Ciorsdan Conran; Joseph Angiello; KSullivan@lewisborogov.com; Jeff Farrell; Linda Yurus; Cheryl Blamires; Peter Ripperger; Joseph Posadas; tritchey@vistafd.org; lewisborovac@aol.com; allewellyn@lewisboropd.com; 'Erika Holze'; captain@lvac-ems.com; chiefs@goldensbridgefd.org; chief@southsalemfire.com; Dana Mayclim; Laura Stone; Michael Portnoy; nilsa.i.gallagher@usps.gov; Jeff Peck; Dan Murtha
Subject: New number in Vista in the Town of Lewisboro: 253 Silver Spring Road

Please note: a vacant lot on Silver Spring Road on the Lewisboro Tax Map (**B**lock 10058- **L**ot 2-**S**heet 52) is now being developed and will be known as **253** Silver Spring Road going forward. This lot in question is now owned by David Beresford (it had been owned by Heile Candullo) and this Beresford lot is located behind the Orris lot (B/L/S 10058-15-52) which is 251 Silver Spring. Thank you.

Standard N.Y.B.T.U. Form 8009-8-33 — Quitclaim Deed — Individual or Corporation.

LIBER 6570 PAGE 28

THIS INDENTURE, made the 29th day of November, nineteen hundred and sixty five

BETWEEN SALVATORE CANDULLO and NANCY CANDULLO, his wife, residing at Silver Spring Road, Town of Lewisboro, County of Westchester, State of New York

party of the first part, and

JOSEPH A. CANDULLO and JUDITH K. CANDULLO, his wife, residing at 1557 York Avenue, New York, N.Y.

party of the second part,

No Stamps

DEC - 7 1965

USER STAMPS ATTACHED $

WITNESSETH, that the party of the first part, in consideration of ----------

----------TEN and 00/100---------- dollars,

lawful money of the United States, ---------- paid

by the party of the second part, does hereby remise, release and quitclaim unto the party of the second part,

the heirs or successors and assigns of the party of the second part forever,

ALL that certain plot, piece or parcel of land, ~~with the buildings and improvements thereon erected~~, situate,

lying and being in the Town of Lewisboro, County of Westchester, and State of New York, being more particularly bounded and described as follows:

BEGINNING at a point in the easterly side of Silver Spring Road where same is intersected by the southerly boundary line of lands now or formerly of Medawar, which point is the northwesterly corner of the premises herein conveyed; thence southerly along the easterly side of Silver Spring Road the following courses and distances: South 16° 55' 00" East 163.34 feet; South 16° 48' 10" East 99.20 feet; and thence on a curve to the left having a radius of 188.75 feet, a central angle of 7° 36' 12" a distance of 25.05 feet to a point; thence leaving Silver Spring Road North 81° 10' 50" East 660.02 feet to a point; thence North 1° 04' 20" East 284.49 feet to lands now or formerly of Medawar; thence westerly along the southerly boundary of lands of said Medawar, South 81° 37' 10" West 729.21 feet to the point or place of beginning.

TOGETHER with an easement for a right of way for ingress and egress for all purposes over the northerly twenty five (25) feet of the premises adjoining the above described premises on the south which right of way is more particularly described as follows:

BEGINNING at a point on the easterly side of Silver Spring Road, which point is at the southwesterly corner of premises described hereinabove; thence easterly along the southerly boundary of said premises North 81° 10' 50" East 660.02 feet, thence South 14° 07' 00" East 25.11 feet, thence South 81° 10' 50" West 658.15 feet to the easterly side of Silver Spring Road, thence on a curve to the right having a radius of 188.75 feet, a central angle of 7° 41' 18" a distance of 25.36 feet to the point or place of beginning.

SUBJECT to an easement for a right of way for ingress and egress for all purposes to other property of the grantor herein adjoining on the south over the southerly twenty five (25) feet of the premises herein conveyed which right of way is more particularly bounded and described as follows:

BEGINNING at a point on the easterly side of Silver Spring Road, which point

1210 — 53

being the southwesterly corner of the premises hereinabove described; thence easterly along the southerly boundary of said herinabove described premises, North 81° 10' 50" east 660.02 feet, thence North 1° 04' 20" east 25.38 feet, thence South 81° 10' 50" west 665.16 feet to a point and the easterly side of Silver Spring Road, thence southerly along the easterly side of Silver Spring Road on a curve to the left having a radius of 188.75 feet, a central angle of 7° 36' 12" a distance of 25.05 feet to the point or place of beginning.

It is understood and agreed that the grantees herein and their successors in title shall, together with the grantees of the property adjoining on the south being simultaneously conveyed, construct, maintain and repair the right of ways herein above described, and the expense of such construction, maintenance and repair shall be borne equally by the said grantees, their respective successors in title and assigns.

SUBJECT to any state of facts an accurate survey may show.

SUBJECT to zoning ordinances of the Town of Lewisboro and any amendments thereto.

NY OWNER'S POLICY OF TITLE INSURANCE

ISSUED BY
STEWART TITLE INSURANCE COMPANY

Any notice of claim and any other notice or statement in writing required to be given to the Company under this Policy must be given to the Company at the address shown in Section 18 of the Conditions.

COVERED RISKS

SUBJECT TO THE EXCLUSIONS FROM COVERAGE, THE EXCEPTIONS FROM COVERAGE CONTAINED IN SCHEDULE B, AND THE CONDITIONS, STEWART TITLE INSURANCE COMPANY, a New York corporation, (the "Company") insures, as of Date of Policy and, to the extent stated in Covered Risks 9 and 10, after Date of Policy, against loss or damage, not exceeding the Amount of Insurance, sustained or incurred by the insured by reason of:

1. Title being vested other than as stated in Schedule A.
2. Any defect in or lien or encumbrance on the Title. This Covered Risk includes but is not limited to insurance against loss from
   (a) A defect in the Title caused by
      (i) forgery, fraud, undue influence, duress, incompetency, incapacity, or impersonation;
      (ii) failure of any person or Entity to have authorized a transfer or conveyance;
      (iii) a document affecting Title not properly created, executed, witnessed, sealed, acknowledged, notarized, or delivered;
      (iv) failure to perform those acts necessary to create a document by electronic means authorized by law;
      (v) a document executed under a falsified, expired, or otherwise invalid power of attorney;
      (vi) a document not properly filed, recorded, or indexed in the Public Records including failure to perform those acts by electronic means authorized by law; or
      (vii) a defective judicial or administrative proceeding.
   (b) The lien of real estate taxes or assessments imposed on the Title by a governmental authority due or payable, but unpaid.
   (c) Any encroachment, encumbrance, violation, variation, or adverse circumstance affecting the Title that would be disclosed by an accurate and complete land survey of the Land. The term "encroachment" includes encroachments of existing improvements located on the Land onto adjoining land, and encroachments onto the Land of existing improvements located on adjoining land.
3. Unmarketable Title.
4. No right of access to and from the Land.
5. The violation or enforcement of any law, ordinance, permit, or governmental regulation (including those relating to building and zoning) restricting, regulating, prohibiting, or relating to
   (a) the occupancy, use, or enjoyment of the Land;
   (b) the character, dimensions, or location of any improvement erected on the Land;
   (c) the subdivision of land; or
   (d) environmental protection

   if a notice, describing any part of the Land, is recorded in the Public Records setting forth the violation or intention to enforce, but only to the extent of the violation or enforcement referred to in that notice.

Countersigned by:

Authorized Countersignature

Sutton Land Services, LLC dba Sutton Land Title A
Company Name

Valley Stream, NY
City, State

322962
Agent ID:

STEWART TITLE INSURANCE COMPANY INCORPORATED 1987 NEW YORK

John Frates
President and General Counsel

David Hisey
Secretary

For coverage information or assistance resolving a complaint, call (800) 433-0014 or visit www.stewartnewyork.com. To make a claim, furnish written notice in accordance with Section 3 of the Conditions.

File No.: SL-005364
NY ALTA Owner's Policy 06-17-06
Policy Serial No.: O-8911-000819819

6. An enforcement action based on the exercise of a governmental police power not covered by Covered Risk 5 if a notice of the enforcement action, describing any part of the Land, is recorded in the Public Records, but only to the extent of the enforcement referred to in that notice.
7. The exercise of the rights of eminent domain if a notice of the exercise, describing any part of the Land, is recorded in the Public Records.
8. Any taking by a governmental body that has occurred and is binding on the rights of a purchaser for value without Knowledge.
9. Title being vested other than as stated in Schedule A or being defective
   (a) as a result of the avoidance in whole or in part, or from a court order providing an alternative remedy, of a transfer of all or any part of the title to or any interest in the Land occurring prior to the transaction vesting Title as shown in Schedule A because that prior transfer constituted a fraudulent or preferential transfer under federal bankruptcy, state insolvency, or similar creditors' rights laws; or
   (b) because the instrument of transfer vesting Title as shown in Schedule A constitutes a preferential transfer under federal bankruptcy, state insolvency, or similar creditors' rights laws by reason of the failure of its recording in the Public Records
      (i) to be timely, or
      (ii) to impart notice of its existence to a purchaser for value or to a judgment or lien creditor.
10. Any defect in or lien or encumbrance on the Title or other matter included in Covered Risks 1 through 9 that has been created or attached or has been filed or recorded in the Public Records subsequent to Date of Policy and prior to the recording of the deed or other instrument of transfer in the Public Records that vests Title as shown in Schedule A.

The Company will also pay the costs, attorneys' fees, and expenses incurred in defense of any matter insured against by this Policy, but only to the extent provided in the Conditions.

EXCLUSIONS FROM COVERAGE

The following matters are expressly excluded from the coverage of this policy, and the Company will not pay loss or damage, costs, attorneys' fees, or expenses that arise by reason of:

1. (a) Any law, ordinance, permit, or governmental regulation (including those relating to building and zoning) restricting, regulating, prohibiting, or relating to
      (i) the occupancy, use, or enjoyment of the Land;
      (ii) the character, dimensions, or location of any improvement erected on the Land;
      (iii) the subdivision of land; or
      (iv) environmental protection;

   or the effect of any violation of these laws, ordinances, or governmental regulations. This Exclusion 1(a) does not modify or limit the coverage provided under Covered Risk 5.
   (b) Any governmental police power. This Exclusion 1(b) does not modify or limit the coverage provided under Covered Risk 6.
2. 2. Rights of eminent domain. This Exclusion does not modify or limit the coverage provided under Covered Risk 7 or 8.
3. Defects, liens, encumbrances, adverse claims, or other matters
   (a) created, suffered, assumed, or agreed to by the Insured Claimant;
   (b) not Known to the Company, not recorded in the Public Records at Date of Policy, but Known to the Insured Claimant and not disclosed in writing to the Company by the Insured Claimant prior to the date the Insured Claimant became an Insured under this policy;
   (c) resulting in no loss or damage to the Insured Claimant;
   (d) attaching or created subsequent to Date of Policy (however, this does not modify or limit the coverage provided under Covered Risk 9 and 10); or
   (e) resulting in loss or damage that would not have been sustained if the Insured Claimant had paid value for the Title.
4. Any claim, by reason of the operation of federal bankruptcy, state insolvency, or similar creditors' rights laws, that the transaction vesting the Title as shown in Schedule A, is
   (a) a fraudulent conveyance or fraudulent transfer; or
   (b) a preferential transfer for any reason not stated in Covered Risk 9 of this policy.
5. Any lien on the Title for real estate taxes or assessments imposed by governmental authority and created or attaching between Date of Policy and the date of recording of the deed or other instrument of transfer in the Public Records that vests Title as shown in Schedule A.

CONDITIONS

1. **DEFINITION OF TERMS**

   The following terms when used in this policy mean:
   (a) "Amount of Insurance": The amount stated in Schedule A, as may be increased or decreased by endorsement to this policy, increased by Section 8(b), or decreased by Sections 10 and 11 of these Conditions.
   (b) "Date of Policy": The date designated as "Date of Policy" in Schedule A.
   (c) "Entity": A corporation, partnership, trust, limited liability company, or other similar legal entity.
   (d) "Insured": The Insured named in Schedule A.
      (i) the term "Insured" also includes
         (A) successors to the Title of the Insured by operation of law as distinguished from purchase, including heirs, devisees, survivors, personal representatives, or next of kin;
         (B) successors to an Insured by dissolution, merger, consolidation, distribution, or reorganization;
         (C) successors to an Insured by its conversion to another kind of Entity;
         (D) a grantee of an Insured under a deed delivered without payment of actual valuable consideration conveying the Title
            (1) if the stock, shares, memberships, or other equity interests of the grantee are wholly-owned by the named Insured,
            (2) if the grantee wholly owns the named Insured,
            (3) if the grantee is wholly-owned by an affiliated Entity of the named Insured, provided the affiliated Entity and the named Insured are both wholly-owned by the same person or Entity, or
            (4) if the grantee is a trustee or beneficiary of a trust created by a written instrument established by the Insured named in Schedule A for estate planning purposes.

(ii) with regard to (A), (B), (C), and (D) reserving, however, all rights and defenses as to any successor that the Company would have had against any predecessor Insured.

(e) "Insured Claimant": An Insured claiming loss or damage.

(f) "Knowledge" or "Known": Actual knowledge, not constructive knowledge or notice that may be imputed to an Insured by reason of the Public Records or any other records that impart constructive notice of matters affecting the Title.

(g) "Land": The land described in Schedule A, and affixed improvements that by law constitute real property. The term "Land" does not include any property beyond the lines of the area described in Schedule A, nor any right, title, interest, estate, or easement in abutting streets, roads, avenues, alleys, lanes, ways, or waterways, but this does not modify or limit the extent that a right of access to and from the Land is insured by this policy.

(h) "Mortgage": Mortgage, deed of trust, trust deed, or other security instrument, including one evidenced by electronic means authorized by law.

(i) "Public Records": Records established under state statutes at Date of Policy for the purpose of imparting constructive notice of matters relating to real property to purchasers for value and without Knowledge. With respect to Covered Risk 5(d), "Public Records" shall also include environmental protection liens filed in the records of the clerk of the United States District Court for the district where the Land is located.

(j) "Title": The estate or interest described in Schedule A.

(k) "Unmarketable Title": Title affected by an alleged or apparent matter that would permit a prospective purchaser or lessee of the Title or lender on the Title to be released from the obligation to purchase, lease, or lend if there is a contractual condition requiring the delivery of marketable title.

2. **CONTINUATION OF INSURANCE**

The coverage of this policy shall continue in force as of Date of Policy in favor of an Insured, but only so long as the Insured retains an estate or interest in the Land, or holds an obligation secured by a purchase money Mortgage given by a purchaser from the Insured, or only so long as the Insured shall have liability by reason of warranties in any transfer or conveyance of the Title. This policy shall not continue in force in favor of any purchaser from the Insured of either (i) an estate or interest in the Land, or (ii) an obligation secured by a purchase money Mortgage given to the Insured.

3. **NOTICE OF CLAIM TO BE GIVEN BY INSURED CLAIMANT**

The Insured shall notify the Company promptly in writing (i) in case of any litigation as set forth in Section 5(a) of these Conditions, (ii) in case Knowledge shall come to an Insured hereunder of any claim of title or interest that is adverse to the Title, as insured, and that might cause loss or damage for which the Company may be liable by virtue of this policy, or (iii) if the Title, as insured, is rejected as Unmarketable Title. If the Company is prejudiced by the failure of the Insured Claimant to provide prompt notice, the Company's liability to the Insured Claimant under the policy shall be reduced to the extent of the prejudice.

4. **PROOF OF LOSS**

In the event the Company is unable to determine the amount of loss or damage, the Company may, at its option, require as a condition of payment that the Insured Claimant furnish a signed proof of loss. The proof of loss must describe the defect, lien, encumbrance, or other matter insured against by this policy that constitutes the basis of loss or damage and shall state, to the extent possible, the basis of calculating the amount of the loss or damage.

5. **DEFENSE AND PROSECUTION OF ACTIONS**

(a) Upon written request by the Insured, and subject to the options contained in Section 7 of these Conditions, the Company, at its own cost and without unreasonable delay, shall provide for the defense of an Insured in litigation in which any third party asserts a claim covered by this policy adverse to the Insured. This obligation is limited to only those stated causes of action alleging matters insured against by this policy. The Company shall have the right to select counsel of its choice (subject to the right of the Insured to object for reasonable cause) to represent the Insured as to those stated causes of action. It shall not be liable for and will not pay the fees of any other counsel. The Company will not pay any fees, costs, or expenses incurred by the Insured in the defense of those causes of action that allege matters not insured against by this policy.

(b) The Company shall have the right, in addition to the options contained in Section 7 of these Conditions, at its own cost, to institute and prosecute any action or proceeding or to do any other act that in its opinion may be necessary or desirable to establish the Title, as insured, or to prevent or reduce loss or damage to the Insured. The Company may take any appropriate action under the terms of this policy, whether or not it shall be liable to the Insured. The exercise of these rights shall not be an admission of liability or waiver of any provision of this policy. If the Company exercises its rights under this subsection, it must do so diligently.

(c) Whenever the Company brings an action or asserts a defense as required or permitted by this policy, the Company may pursue the litigation to a final determination by a court of competent jurisdiction, and it expressly reserves the right, in its sole discretion, to appeal any adverse judgment or order.

6. **DUTY OF INSURED CLAIMANT TO COOPERATE**

(a) In all cases where this policy permits or requires the Company to prosecute or provide for the defense of any action or proceeding and any appeals, the Insured shall secure to the Company the right to so prosecute or provide defense in the action or proceeding, including the right to use, at its option, the name of the Insured for this purpose. Whenever requested by the Company, the Insured, at the Company's expense, shall give the Company all reasonable aid (i) in securing evidence, obtaining witnesses, prosecuting or defending the action or proceeding, or effecting settlement, and (ii) in any other lawful act that in the opinion of the Company may be necessary or desirable to establish the Title or any other matter as insured. If the Company is prejudiced by the failure of the Insured to furnish the required cooperation, the Company's obligations to the Insured under the policy shall terminate, including any liability or obligation to defend, prosecute, or continue any litigation, with regard to the matter or matters requiring such cooperation.

(b) The Company may reasonably require the Insured Claimant to submit to examination under oath by any authorized representative of the Company and to produce for examination, inspection, and copying, at such reasonable times and places as may be designated by the authorized representative of the Company, all records, in whatever medium maintained, including books, ledgers, checks, memoranda, correspondence, reports, e-mails, disks, tapes, and videos whether bearing a date before or after Date of Policy, that reasonably pertain to

the loss or damage. Further, if requested by any authorized representative of the Company, the Insured Claimant shall grant its permission, in writing, for any authorized representative of the Company to examine, inspect, and copy all of these records in the custody or control of a third party that reasonably pertain to the loss or damage. All information designated as confidential by the Insured Claimant provided to the Company pursuant to this Section shall not be disclosed to others unless, in the reasonable judgment of the Company, it is necessary in the administration of the claim. Failure of the Insured Claimant to submit for examination under oath, produce any reasonably requested information, or grant permission to secure reasonably necessary information from third parties as required in this subsection, unless prohibited by law or governmental regulation, shall terminate any liability of the Company under this policy as to that claim.

7. **OPTIONS TO PAY OR OTHERWISE SETTLE CLAIMS; TERMINATION OF LIABILITY**

In case of a claim under this policy, the Company shall have the following additional options:

(a) To Pay or Tender Payment of the Amount of Insurance. To pay or tender payment of the Amount of Insurance under this policy together with any costs, attorneys' fees, and expenses incurred by the Insured Claimant that were authorized by the Company up to the time of payment or tender of payment and that the Company is obligated to pay. Upon the exercise by the Company of this option, all liability and obligations of the Company to the Insured under this policy, other than to make the payment required in this subsection, shall terminate, including any liability or obligation to defend, prosecute, or continue any litigation.

(b) To Pay or Otherwise Settle With Parties Other Than the Insured or With the Insured Claimant.

(i) to pay or otherwise settle with other parties for or in the name of an Insured Claimant any claim insured against under this policy. In addition, the Company will pay any costs, attorneys' fees, and expenses incurred by the Insured Claimant that were authorized by the Company up to the time of payment and that the Company is obligated to pay; or

(ii) to pay or otherwise settle with the Insured Claimant the loss or damage provided for under this policy, together with any costs, attorneys' fees, and expenses incurred by the Insured Claimant that were authorized by the Company up to the time of payment and that the Company is obligated to pay.

Upon the exercise by the Company of either of the options provided for in subsections (b)(i) or (ii), the Company's obligations to the Insured under this policy for the claimed loss or damage, other than the payments required to be made, shall terminate, including any liability or obligation to defend, prosecute, or continue any litigation.

8. **DETERMINATION AND EXTENT OF LIABILITY**

This policy is a contract of indemnity against actual monetary loss or damage sustained or incurred by the Insured Claimant who has suffered loss or damage by reason of matters insured against by this policy.

(a) The extent of liability of the Company for loss or damage under this policy shall not exceed the lesser of

(i) the Amount of Insurance; or

(ii) the difference between the value of the Title as insured and the value of the Title subject to the risk insured against by this policy.

(b) If the Company pursues its rights under Section 5 of these Conditions and is unsuccessful in establishing the Title, as insured,

(i) the Amount of Insurance shall be increased by 10%, and

(ii) the Insured Claimant shall have the right to have the loss or damage determined either as of the date the claim was made by the Insured Claimant or as of the date it is settled and paid.

(c) In addition to the extent of liability under (a) and (b), the Company will also pay those costs, attorneys' fees, and expenses incurred in accordance with Sections 5 and 7 of these Conditions.

9. **LIMITATION OF LIABILITY**

(a) If the Company establishes the Title, or removes the alleged defect, lien, or encumbrance, or cures the lack of a right of access to or from the Land, or cures the claim of Unmarketable Title, all as insured, in a reasonably diligent manner by any method, including litigation and the completion of any appeals, it shall have fully performed its obligations with respect to that matter and shall not be liable for any loss or damage caused to the Insured.

(b) In the event of any litigation, including litigation by the Company or with the Company's consent, the Company shall have no liability for loss or damage until there has been a final determination by a court of competent jurisdiction, and disposition of all appeals, adverse to the Title, as insured.

(c) The Company shall not be liable for loss or damage to the Insured for liability voluntarily assumed by the Insured in settling any claim or suit without the prior written consent of the Company.

10. **REDUCTION OF INSURANCE; REDUCTION OR TERMINATION OF LIABILITY**

All payments under this policy, except payments made for costs, attorneys' fees, and expenses, shall reduce the Amount of Insurance by the amount of the payment.

11. **LIABILITY NONCUMULATIVE**

The Amount of Insurance shall be reduced by any amount the Company pays under any policy insuring a Mortgage to which exception is taken in Schedule B or to which the Insured has agreed, assumed, or taken subject, or which is executed by an Insured after Date of Policy and which is a charge or lien on the Title, and the amount so paid shall be deemed a payment to the Insured under this policy.

12. **PAYMENT OF LOSS**

When liability and the extent of loss or damage have been definitely fixed in accordance with these Conditions, the payment shall be made within 30 days.

13. **RIGHTS OF RECOVERY UPON PAYMENT OR SETTLEMENT**

(a) Whenever the Company shall have settled and paid a claim under this policy, it shall be subrogated and entitled to the rights of the Insured Claimant in the Title and all other rights and remedies in respect to the claim that the Insured Claimant has against any person or property, to the extent of the amount of any loss, costs, attorneys' fees, and expenses paid by the Company. If requested by the Company, the Insured Claimant shall execute documents to evidence the transfer to the Company of these rights and remedies. The Insured Claimant shall permit the Company to sue, compromise, or settle in the name of the Insured Claimant and to use the name of the Insured Claimant in any

transaction or litigation involving these rights and remedies. If a payment on account of a claim does not fully cover the loss of the Insured Claimant, the Company shall defer the exercise of its right to recover until after the Insured Claimant shall have recovered its loss.

(b) The Company's right of subrogation includes the rights of the Insured to indemnities, guaranties, other policies of insurance, or bonds, notwithstanding any terms or conditions contained in those instruments that address subrogation rights.

14. **ARBITRATION**

Either the Company or the Insured may demand that the claim or controversy shall be submitted to arbitration pursuant to the Title Insurance Arbitration Rules of the American Land Title Association ("Rules"). Except as provided in the Rules, there shall be no joinder or consolidation with claims or controversies of other persons. Arbitrable matters may include, but are not limited to, any controversy or claim between the Company and the Insured arising out of or relating to this policy, any service in connection with its issuance or the breach of a policy provision, or to any other controversy or claim arising out of the transaction giving rise to this policy. All arbitrable matters when the Amount of Insurance is $2,000,000 or less shall be arbitrated at the option of either the Company or the Insured. All arbitrable matters when the Amount of Insurance is in excess of $2,000,000 shall be arbitrated only when agreed to by both the Company and the Insured. Arbitration pursuant to this policy and under the Rules shall be binding upon the parties. Judgment upon the award rendered by the Arbitrator(s) may be entered in any court of competent jurisdiction.

15. **LIABILITY LIMITED TO THIS POLICY; POLICY ENTIRE CONTRACT**

(a) This policy together with all endorsements, if any, attached to it by the Company is the entire policy and contract between the Insured and the Company. In interpreting any provision of this policy, this policy shall be construed as a whole.

(b) Any claim of loss or damage that arises out of the status of the Title or by any action asserting such claim shall be restricted to this policy.

(c) Any amendment of or endorsement to this policy must be in writing and authenticated by an authorized person, or expressly incorporated by Schedule A of this policy.

(d) Each endorsement to this policy issued at any time is made a part of this policy and is subject to all of its terms and provisions. Except as the endorsement expressly states, it does not (i) modify any of the terms and provisions of the policy, (ii) modify any prior endorsement, (iii) extend the Date of Policy, or (iv) increase the Amount of Insurance.

16. **SEVERABILITY**

In the event any provision of this policy, in whole or in part, is held invalid or unenforceable under applicable law, the policy shall be deemed not to include that provision or such part held to be invalid, but all other provisions shall remain in full force and effect.

17. **CHOICE OF LAW; FORUM**

(a) Choice of Law: The Insured acknowledges the Company has underwritten the risks covered by this policy and determined the premium charged therefor in reliance upon the law affecting interests in real property and applicable to the interpretation, rights, remedies, or enforcement of policies of title insurance of the jurisdiction where the Land is located.
Therefore, the court or an arbitrator shall apply the law of the jurisdiction where the Land is located to determine the validity of claims against the Title that are adverse to the Insured and to interpret and enforce the terms of this policy. In neither case shall the court or arbitrator apply its conflicts of law principles to determine the applicable law.

(b) Choice of Forum: Any litigation or other proceeding brought by the Insured against the Company must be filed only in a state or federal court within the United States of America or its territories having appropriate jurisdiction.

18. **NOTICES, WHERE SENT**

Any notice of claim and any other notice or statement in writing required to be given to the Company under this policy must be given to the Company at Claims Department at 60 East 42nd Street, Suite 1260, New York, NY 10165.

SUTTON LAND TITLE AGENCY
as Agent for
STEWART TITLE INSURANCE COMPANY

OWNER'S POLICY
SCHEDULE A

Name and Address of Title Insurance Company:
Stewart Title Insurance Company
60 E. 42nd Street, Suite 1260
New York, NY 10165

Title Number: **SL-005364** Policy Number: **O-8911-000819819**

Address Reference
N/A Silver Spring Road, Lewisboro, New York

Amount of Insurance: **$50,000.00**

Date of Policy: May 14, 2021

1. Name of Insured

   David Beresford and Rozleny J. Beresford, husband and wife

2. The estate on interest in the land which is covered by this policy is:

   Fee Simple

3. Title to the estate of interest in the land is vested in the insured by:

   David Beresford and Rozleny J. Beresford, husband and wife, acquired title by a deed dated May 14, 2021, and to be duly recorded in the Westchester County Clerk's office, made by Judith K. Candullo and Heile Candullo.

4. The land referred to in this Policy is described as follows:

   See Schedule A Description attached hereto and made a part hereof.

--END SCHEDULE A--

SUTTON LAND TITLE AGENCY
as Agent for
STEWART TITLE INSURANCE COMPANY

OWNER'S POLICY
SCHEDULE A DESCRIPTION

Title Number: **SL-005364** Policy Number: **O-8911-000819819**

ALL that certain plot, piece or parcel of land, situate, lying and being in the Town of Lewisboro, County of Westchester and State of New York, and being shown and designated as Parcel "B" on a certain map entitled "Survey of J & J Candullo property situate in Town of Lewisboro, Westchester County, New York" made by M. R. Moody, Surveyor, and filed in Westchester County Clerk's Office, Division of Land Records, on September 15, 1977 as Map No. 19234.

Note: Address, Block & Lot shown for informational purposes only.

Designated as Section 78.1 Block 2 Lot 11 and also known as N/A Silver Spring Road, Lewisboro, NY 10518.

SUTTON LAND TITLE AGENCY
as Agent for
STEWART TITLE INSURANCE COMPANY

OWNER'S POLICY
SCHEDULE B

Exceptions from Coverage

Title Number: **SL-005364** Policy Number: **O-8911-000819819**

This policy does not insure against loss of damage (and the Company will not pay costs, attorneys' fees or expenses) which arise by reason of:

1. Rights of tenants or persons in possession, if any.

2. Any state of facts which a guaranteed survey of current date would disclose.

3. The exact location, courses, distances and dimensions of the premises described in Schedule A are not insured without a survey thereof acceptable to this Company.

4. Covenants, restrictions, easements, leases and agreements of record, etc., more fully set forth herein:

   a. Gas and Electric Easement recorded in Liber 6823 pages 614-616.

   b. Easement as recited in Deed Liber 6570 pages 28-31.

   c. Notes and Easements as shown on Filed Map No. 19234.

5. Rights and easements, if any, acquired by any public utilities company to maintain its poles and operate its wires, lines, etc., in, to and over the premises herein and in, to and over the streets adjacent thereto.

6. any water charges and sewer rents billed and/or entered for periods prior to closing.

7. Riparian rights, if any, in favor of the described premises are not insured

8. Rights of others to drain through creeks and streams, if any, which cross premises and the natural flow thereof will be excepted.

--END SCHEDULE B--

POLICY AUTHENTICATION ENDORSEMENT

Attached to and forming a part of

Policy No.: O-8911-000819819
Issued By

stewart title insurance company

When the policy is issued by the Company with a policy number and Date of Policy, the Company will not deny liability under the policy or any endorsements issued with the policy solely on the grounds that the policy or endorsements were issued electronically or lack signatures in accordance with the Conditions.

This endorsement is issued as part of the policy. Except as it expressly states, it does not (i) modify any of the terms and provisions of the policy, (ii) modify any prior endorsements, (iii) extend the Date of Policy, or (iv) increase the Amount of Insurance. To the extent a provision of the policy or a previous endorsement is inconsistent with an express provision of this endorsement, this endorsement controls. Otherwise, this endorsement is subject to all of the terms and provisions of the policy and of any prior endorsements.

Dated: May 14, 2021

stewart title insurance company

John Frates
President and General Counsel

STEWART TITLE INSURANCE COMPANY INCORPORATED 1987 NEW YORK

Denise Carraux
Secretary

Countersigned:

By: _____
Authorized Officer or Agent

STANDARD NEW YORK ENDORSEMENT
OWNER'S POLICY

Attached to and forming a part of

Policy No.: O-8911-000819819
Issued By

stewart title insurance company

1. The following is added as a Covered Risk:

   "11. Any statutory lien arising under Article 2 of the New York Lien Law for services, labor or materials furnished prior to the date hereof, and which has now gained or which may hereafter gain priority over the estate or interest of the insured as shown in Schedule A of this policy."

2. Exclusion Number 5 is deleted, and the following is substituted:

   5. Any lien on the Title for real estate taxes, assessments, water charges or sewer rents imposed by governmental authority and created or attaching between Date of Policy and the date of recording of the deed or other instrument of transfer in the Public Records that vests Title as Shown in Schedule A.

This endorsement is issued as part of the policy. Except as it expressly states, it does not (i) modify any of the terms and provisions of the policy, (ii) modify any prior endorsements, (iii) extend the Date of Policy, or (iv) increase the Amount of Insurance. To the extent a provision of the policy or a previous endorsement is inconsistent with an express provision of this endorsement, this endorsement controls. Otherwise, this endorsement is subject to all of the terms and provisions of the policy and of any prior endorsements.

Dated: May 14, 2021

stewart title insurance company

John Frates
President and General Counsel

Countersigned:

By: _____
Authorized Officer or Agent

STEWART TITLE INSURANCE COMPANY INCORPORATED 1987 NEW YORK

Denise Carraux
Secretary

STIC Privacy Notice
Stewart Title Companies

WHAT DO THE STEWART TITLE COMPANIES DO WITH YOUR PERSONAL INFORMATION?

Federal and applicable state law and regulations give consumers the right to limit some but not all sharing. Federal and applicable state law regulations also require us to tell you how we collect, share, and protect your personal information. Please read this notice carefully to understand how we use your personal information. This privacy notice is distributed on behalf of the Stewart Title Guaranty Company and its title affiliates including Stewart Title Insurance Company(the Stewart Title Companies), pursuant to Title V of the Gramm-Leach-Bliley Act (GLBA).

The types of personal information we collect and share depend on the product or service that you have sought through us. This information can include social security numbers and driver's license number.

All financial companies, such as the Stewart Title Companies, need to share customers' personal information to run their everyday business—to process transactions and maintain customer accounts. In the section below, we list the reasons that we can share customers' personal information; the reasons that we choose to share; and whether you can limit this sharing.

Reasons we can share your personal information.	Do we share	Can you limit this sharing?
For our everyday business purposes— to process your transactions and maintain your account. This may include running the business and managing customer accounts, such as processing transactions, mailing, and auditing services, and responding to court orders and legal investigations.	Yes	No
For our marketing purposes — to offer our products and services to you.	Yes	No
For joint marketing with other financial companies	No	We don't share
For our affiliates' everyday business purposes— information about your transactions and experiences. Affiliates are companies related by common ownership or control. They can be financial and non-financial companies. *Our affiliates may include companies with a Stewart name; financial companies, such as Stewart Title Company*	Yes	No
For our affiliates' everyday business purposes— information about your creditworthiness.	No	We don't share
For our affiliates to market to you – For your convenience, Stewart has developed a means for you to opt out from its affiliates marketing even though such mechanism is not legally required.	Yes	Yes, send your first and last name, the email address used in your transaction, your Stewart file number and the Stewart office location that is handling your transaction by email to optout@stewart.com or fax to 1-800-335-9591.
For non-affiliates to market to you. Non-affiliates are companies not related by common ownership or control. They can be financial and non-financial companies.	No	We don't share

We may disclose your personal information to our affiliates or to non-affiliates as permitted by law. If you request a transaction with a non-affiliate, such as a third party insurance company, we will disclose your personal information to that non-affiliate. [We do not control their subsequent use of information, and suggest you refer to their privacy notices.]

SHARING PRACTICES

How often do the Stewart Title companies notify me about their practices?	We must notify you about our sharing practices when you request a transaction.
How do the Stewart Title Companies protect my personal information?	To protect your personal information from unauthorized access and use, we use security measures that comply with federal law. These measures include computer, file, and building safeguards.
How do the Stewart Title Companies collect my personal information?	We collect your personal information, for example, when you ■ request insurance-related services ■ provide such information to us We also collect your personal information from others, such as the real estate agent or lender involved in your transaction, credit reporting agencies, affiliates or other companies.
What sharing can I limit?	Although federal and state law give you the right to limit sharing (e.g., opt out) in certain instances, we do not share your personal information in those instances.

Contact us: If you have any questions about this privacy notice, please contact us at: **Stewart Title Insurance Company, 60 East 42nd Street, Suite 1260, New York, NY 10165.**

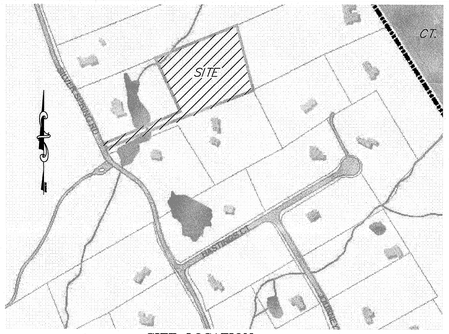

SITE LOCATION

DESIGN CRITERIA

NOTE: DESIGN CRITERIA AND STANDARDS FOR THE CONSTRUCTION OF A SEPARATE SEWAGE TREATMENT SYSTEM IS IN ACCORDANCE WITH THOSE SET FORTH BY THE WESTCHESTER COUNTY DEPARTMENT OF HEALTH'S RULES AND REGULATIONS FOR THE DESIGN AND CONSTRUCTION OF RESIDENTIAL SUBSURFACE TREATMENT SYSTEMS AND DRILLED WELLS AND THE NEW YORK STATE DEPARTMENT OF HEALTH'S APPENDIX 75-A.

LEGEND

- 87.65 — EXISTING SPOT ELEVATION
- 840 — EXISTING CONTOUR
- T/W — TOP OF WALL
- B/W — BOTTOM OF WALL
- 99.06 — PROPOSED SPOT ELEVATION
- 100 — PROPOSED CONTOUR
- LeB — US SCS SOIL TYPE
- Sm
- T-3 — TEST PIT
- P-3 — PERCOLATION TEST
- WL A-5 — WETLAND FLAG
- 14" Map — TREE TO BE REMOVED

Map Unit Symbol	Map Unit Name
CIB	Charlton fine sandy loam, 3 to 8 percent slopes, very stony
LeB	Leicester loam, 2 to 8 percent slopes, very stony
NcA	Natchaug muck, 0 to 2 percent slopes
Sm	Sun loam, extremely stony
SuB	Sutton loam, 3 to 8 percent slopes
Totals for Area of Interest	

NRCS SOIL TYPES

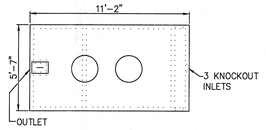

PLAN VIEW

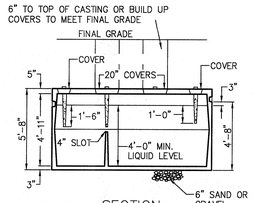

SECTION

1500 GALLON DUAL COMPARTMENT SEPTIC TANK

NOT TO SCALE

NOTE: CONCRETE STRUCTURES BY MID HUDSON CONCRETE OAE.

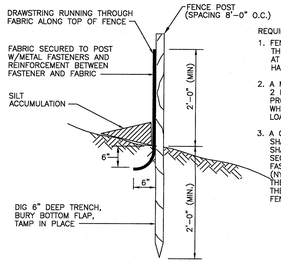

REQUIREMENTS FOR SILT FENCE:

1. FENCE POSTS SHALL BE SPACED 8 FT. CENTER-TO-CENTER OR CLOSER. THEY SHALL EXTEND AT LEAST 2 FEET INTO THE GROUND AND EXTEND AT LEAST 2 FEET ABOVE GROUND. POSTS SHALL BE CONSTRUCTED OF HARDWOOD WITH A MINIMUM DIAMETER THICKNESS OF 1 1/2 INCHES.
2. A METAL FENCE WITH 6 INCH OR SMALLER OPENINGS AND AT LEAST 2 FEET HIGH MAY BE UTILIZED, FASTENED TO THE FENCE POSTS, TO PROVIDE REINFORCEMENT AND SUPPORT TO THE GEOTEXTILE FABRIC WHERE SPACE FOR OTHER PRACTICES IS LIMITED AND HEAVY SEDIMENT LOADING IS EXPECTED.
3. A GEOTEXTILE FABRIC, RECOMMENDED FOR SUCH USE BY THE MANUFACTURER, SHALL BE BURIED AT LEAST 6 INCHES DEEP IN THE GROUND. THE FABRIC SHALL EXTEND AT LEAST 2 FEET ABOVE THE GROUND. THE FABRIC MUST BE SECURELY FASTENED TO THE POSTS USING A SYSTEM CONSISTING OF METAL FASTENERS (NAILS OR STAPLES) AND A HIGH STRENGTH REINFORCEMENT MATERIAL (NYLON WEBBING, GROMMETS, WASHERS ETC.) PLACED BETWEEN THE FASTENER AND THE GEOTEXTILE FABRIC. THE FASTENING SYSTEM SHALL RESIST TEARING AWAY FROM THE POST. THE FABRIC SHALL INCORPORATE A DRAWSTRING IN THE PORTION OF THE FENCE FOR ADDED STRENGTH.

SILT FENCE DETAIL

N.T.S.

WESTCHESTER COUNTY HEALTH DEPARTMENT - GENERAL NOTES

1. THERE SHALL BE NO TREES WITHIN 10 FEET OF THE OWTS.
2. THERE ARE NO WELLS WITHIN 200' OF OWTS UNLESS OTHERWISE SHOWN ON PLAN.
3. THERE ARE NO OWTS WITHIN 200' OF WELL UNLESS OTHERWISE SHOWN ON PLAN.
4. THE PROPOSED OWTS AREA SHALL BE ISOLATED AND PROTECTED AGAINST DAMAGE BY EROSION, STORAGE OF EARTH OR MATERIALS, DISPLACEMENT, COMPACTION OR OTHER ADVERSE PHYSICAL CHANGE IN THE CHARACTERISTICS OF THE SOIL OR IN THE DRAINAGE OF THE AREA.
5. IF FOR ANY REASON THE APPROVED CONSTRUCTION PLAN CAN NOT BE FOLLOWED, A REVISED PLAN MUST BE PREPARED, SUBMITTED, AND APPROVED BY WCDH.
6. THE DESIGN PROFESSIONAL SHALL SUPERVISE THE CONSTRUCTION OF THE OWTS AND MAKE AN OPEN WORKS INSPECTION.
7. WITHIN 24-HOURS OF THE COMPLETION OF THE OWTS, THE DESIGN PROFESSIONAL MUST NOTIFY THE WESTCHESTER COUNTY DEPARTMENT OF HEALTH (WCDH) THAT THE OWTS IS READY FOR INSPECTION BY SUBMITTING A COMPLETED REQUEST FOR AN OPEN WORKS INSPECTION ON THE APPROPRIATE FORM TO WCDH.
8. THAT NO BACKFILLING OF A COMPLETED OWTS CAN OCCUR UNTIL AFTER IT HAS BEEN INSPECTED AND ACCEPTED BY THE WESTCHESTER COUNTY DEPARTMENT OF HEALTH.
9. AFTER BACKFILLING THE OWTS, THE AREA SHALL BE COVERED WITH A MINIMUM OF 4 INCHES OF CLEAN TOP SOIL, SEEDED AND MULCHED.
10. THE INSTALLATION OF THE OWTS SHALL BE IN ACCORDANCE WITH THE RULES AND REGULATIONS FOR THE DESGIN AND CONSTRUCTION OF RESIDENTIAL SUBSURFACE SEWAGE TREATMENT SYSTEMS AND DRILLED WELLS IN WESTCHESTER COUNTY, NY.
11. ALL PIPES CONNECTING TO TANK AND BOXES SHALL BE CUT FLUSH WITH THE INSIDE WALL OF BOX.
12. THE PROPOSED OWTS SHALL BE INSTALLED BY A WESTCHESTER COUNTY LINCENSED SEPTIC CONTRACTOR.
13. PRIOR TO ANY EXCAVATION ALL UNDERGROUND UTILITIES MUST BE LOCATED. CALL 1-800-962-7962.
14. THE WESTCHESTER COUNTY HEALTH DEPARTMENT APPROVAL EXPIRES ONE (1) YEAR FROM THE DATE ON THE APPROVAL STAMP AND IS REQUIRED TO BE RENEWED ON OR BEFORE THE EXPIRATION DATE. THE APPROVAL IS REVOCABLE FOR CAUSE OR MAY BE AMENDED OF MODIFIED WHEN CONSIDERED NECESSARY BY THE DEPARTMENT.
15. THERE ARE NO SOURCES OF CONTAMINATION WITHIN 200 FEET OF THE PROPOSED WELL.
16. THE MINIMUM WELL YIELD SHALL BE 5 GPM. YIELDS LESS THAN 5 GPM MUST BE IMMEDIATELY REPORTED TO THE HEALTH DEPARTMENT.
17. THE OWTS AREA SHALL BE STAKED AND ROPED OFF SO THAT NO TRUCKS, MACHINERY, BUILDING MATERIALS, NOR EXCAVATED EARTH SHALL BE ALLOWED IN THE OWTS AREA.
18. ALL EROSION CONTROL MEASURES SHALL BE INSTALLED PRIOR TO THE START OF ANY CONSTRUCTION.
19. CONSTRUCTION OF OWTS TO BE IN ACCORDANCE WITH THESE PLANS, ANY REVISIONS THERETO, AND THE RULES AND REGULATIONS OF THE PERMIT ISSUING GOVERMENT AGENCY.
20. EXISTING WELL TO BE ABANDONED.
21. THE OWTS SHOWN HEREON DOES NOT PROVIDE FOR THE INSTALLATION OF A GARBAGE GRINDER. GARBAGE GRINDERS ARE NOT PERMITTED TO DISCHARGE TO A SEPTIC SYSTEM IN WESTCHESTER COUNTY.
22. WESTCHESTER COUNTY HEALTH DEPARTMENT APPROVAL IS BASED ON THE LOCATION OF THE OWTS, WELL, BUILDING, SETBACKS, AND DRIVEWAYS AS SHOWN ON THE APPROVED DRAWING. MODIFICATIONS ARE TO HAVE PRIOR WESTCHESTER COUNTY HEALTH DEPARTMENT APPROVAL. UNAUTHORIZED MODIFICATIONS MADE TO THIS DRAWING AFTER THE DATE OF THE WESTCHESTER COUNTY HEALTH DEPARTMENT APPROVAL VOIDS SAID APPROVAL.
23. ALL STONE WALLS IN AND WITHIN 10 FEET OF THE OWTS AREA SHALL BE REMOVED TO THEIR ENTIRE DEPTH AND THE RESULTING VOID REPLACED WITH SIMILAR ON SITE SOIL.
24. CUT OR FILL IS NOT PERMITTED IN THE OWTS AREA, EXCEPT IF SO SPECIFIED ON THIS PLAN.
25. OCCUPANCY OF THESE STRUCTURES WILL NOT BE PERMITTED UNTIL THE CONSTRUCTION COMPLIANCE APPLICATION HAS BEEN RECEIVED AND APPROVED BY THE WESTCHESTER COUNTY HEALTH DEPARTMENT AND FORWARDED TO THE BUILDING INSPECTOR OF THE RESPECTIVE MUNICIPALITY AS PART OF THE CERTIFICATE OF OCCUPANCY APPLICATION.
26. THIS PLAN IS APPROVED FOR SEWAGE TREATMENT AND/OR WATER SUPPLY ONLY, AND ALL OTHER REQUIRED PERMITS AND/OR APPROVALS ARE THE RESPONSIBILITY OF THE PERMIT HOLDER.

DESIGN DATA

DEEP HOLE DESCRIPTION (8/20/20):

T-1. 0"-12" TOPSOIL, 12"-48" MODERATELY COMPACTED MEDIUM SANDY LOAM. 48"-84" MODERATELY COMPACTED TO LOOSE MEDIUM TO COARSE SAND WITH STONE. NO GWT OR LEDGE.

T-2. 0"-12" TOPSOIL, 12"-36" MODERATELY COMPACTED MEDIUM SANDY LOAM 36"-84" MODERATELY COMPACTED TO LOOSE MEDIUM TO COARSE SAND WITH STONE. NO GWT OR LEDGE.

T-3. 0"-12" TOPSOIL, 12"-36" MODERATELY COMPACTED MEDIUM SANDY LOAM. 36"-84" MODERATELY COMPACTED TO LOOSE MEDIUM TO COARSE SAND WITH STONE. NO GWT OR LEDGE.

T-4. 0"-12" TOPSOIL, 12"-48" MODERATELY COMPACTED MEDIUM SANDY LOAM. 48"-96" MODERATELY COMPACTED TO LOOSE MEDIUM TO COARSE SAND WITH STONE. NO GWT OR LEDGE.

SOIL PERCOLATION RATE:	11-15	MIN./INCH. OF DROP
SOIL APPLICATION RATE:	0.8	GALS.-DAY/SQ. FT.
NUMBER OF BEDROOMS:	4	
DESIGN FLOW:	800	GALS./DAY
SEPTIC TANK CAPACITY:	1,500	GALS. EACH
ABSORPTION AREA REQUIRED:	1,000	SQ. FT (1,000 LF TRENCHES)
ABSORPTION TRENCHES PROVIDED:	504	L.F. (WIDTH = 2')
ABSORPTION AREA PROVIDED:	504 x 2 =1,008	SQ. FT.
SLOPE OF PRIMARY AREA:	10.0%	
SLOPE OF EXPANSION AREA:	14.0%	
EXPANSION TRENCHES REQUIRED:	500 LF	
EXPANSION TRENCHES PROVIDED:	500 LF	

UNITED STATES DEPARTMENT OF AGRICULTURE SOIL CONSERVATION SERVICE SOILS

Sm - Sun Loam
LeB - Leicester Loam
CIB - Charlton Fine Sandy Loam

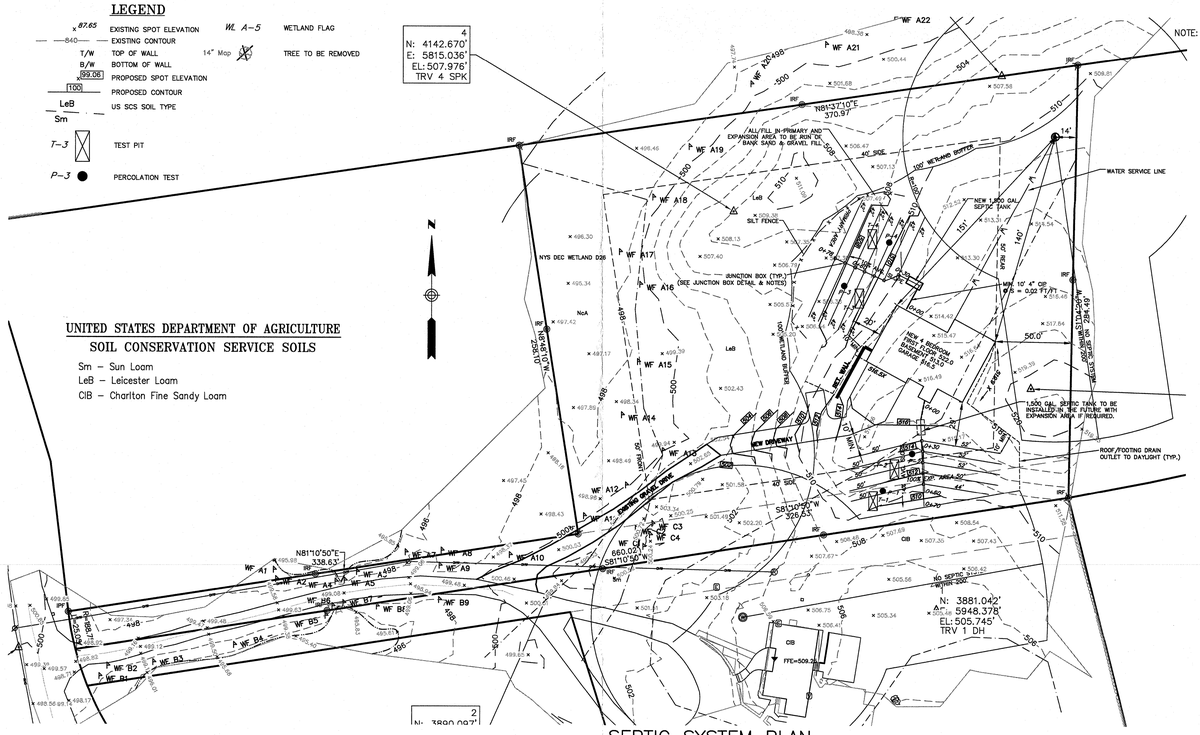

SEPTIC SYSTEM PLAN

GRAPHIC SCALE

40 0 20 40 80 160

(IN FEET)
1 inch = 40 ft.

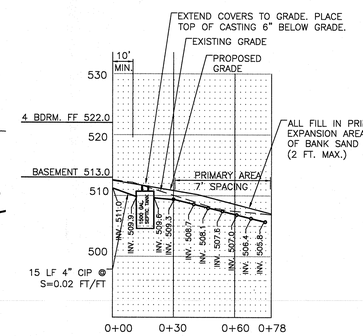

PROFILE FOR NEW HOUSE SSTS

SCALE: VERT. 1" = 10'
HORIZ. 1" = 30'

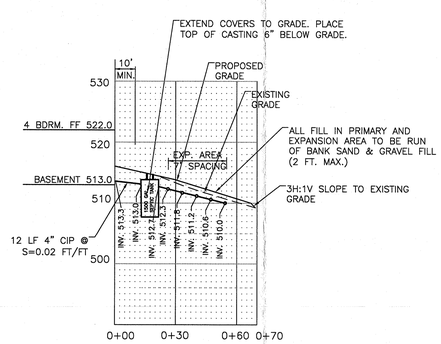

PROFILE FOR EXPANSION SSTS

SCALE: VERT. 1" = 10'
HORIZ. 1" = 30'

NOTES:
1. BOUNDARY AND TOPOGRAPHIC INFORMATION PROVIDED BY ROWAN LAND SURVEYING, PLLC, FOR SBL 78.11-2-11, LEWSBORO, NY DATED 03.27.20.
2. WETLANDS FLAGGING BY PAUL J. JAEHNIG WETLANDS CONSULTING AND CONFIRMED BY NYS DEC MARCH 2, 2020
3. THERE ARE NO 100 YEAR FLOODPLAINS ON THIS PROPERTY AS PER FEMA FLOODPLAIN MAPPING.
4. PROPERTY IS LOT B J&J CANDULLO SUBDIVISION FM NO. 19234 FILED 09.15.77.
5. TOTAL AREA OF DISTURBANCE = 33,000 SF (0.76 AC.)

OWNER ADDRESS:
DAVID BERESFORD
31 ANTON DRIVE
CARMEL, NY 10512

SITE ADDRESS:
SILVER SPRING ROAD
S. SALEM, NY 10590

DRAINAGE BASIN: LI SOUND

ESTIMATED START TIME: APR. 2021
ESTIMATED COMPLETION TIME: APR. 2021

MAINTENANCE NOTES

1. SEPTIC TANK SHOULD BE INSPECTED AND PUMPED ANNUALLY OR AS NEEDED TO PREVENT SOLIDS OVERFLOW TO THE DISPOSAL FIELD.
2 NO SOLID SANITARY PRODUCTS, GREASE, BLEACH AND OTHER PRODUCTS THAT COULD AFFECT SYSTEM PERFORMANCE SHOULD BE DUMPED INTO ANY PLUMBING.
3 NO FOOD DISPOSAL OR GARBAGE GRINDER THAT DISCHARGES TO THE SEPTIC SYSTEM SHALL BE INSTALLED.
4 NO MOTOR VEHICLES SHOULD DRIVE OR PARK ON THE DISPOSAL FIELD AREA OR TANK.

GENERAL NOTES

THERE ARE NO SEPTIC SYSTEMS (EXISTING OR PROPOSED) LOCATED WITHIN THE REQUIRED RESTRICTIVE DISTANCES FROM THE EXISTING DRILLED WELL.

THERE ARE NO EXISTING OR PROPOSED DRILLED WELLS WITHIN THE REQUIRED RESTRICTIVE DISTANCES FROM THE PROPOSED SEPTIC SYSTEM.

NO PORTION OF THE PROPOSED ABSORPTION TRENCH SYSTEM SHALL BE CLOSER THAN 10ft. TO ANY PROPERTY LINE OR 20ft. TO ANY BUILDING.

SEPTIC TANKS SHALL BE AT LEAST 50ft. AND ABSORPTION TRENCHES 100ft. FROM ANY WATERCOURSE OR WETLAND.

EROSION CONTROL NOTES

ALL CONTROL MEASURES FOR EROSION AND SEDIMENTATION SHALL COMPLY WITH THE FOLLOWING INSPECTION SCHEDULE:
A) WEEKLY INSPECTIONS OF ALL CONTROL MEASURES.
B) WEEKLY INSPECTIONS OF IN-STREAM CONTROL MEASURES.
C) INSPECTIONS OF ALL CONTROL MEASURES BEFORE FORECASTED AND AFTER PERIODS OF HEAVY OR PROLONGED RAIN.
D) WEEKLY INSPECTIONS OF ON AND OFF-SITE AREAS DOWNSTREAM FROM CONSTRUCTION ACTIVITIES.

THE INSPECTIONS SHALL BE CONDUCTED BY THE APPLICANT AND/OR HIS REPRESENTATIVE, I.E. THE SITE ENGINEER, OR THE CONTRACTOR, TO DETERMINE THE FOLLOWING:
A) THE CONDITIONS OF THE CONTROL MEASURES AND THE NEED FOR REPAIR OR REPLACEMENT.
B) THE NEED FOR MAINTENANCE, E.G. REMOVAL OF SEDIMENT FROM BARRIERS, TRAPS, AND BASINS.
C) THE NEED FOR ADDITIONAL CONTROL MEASURES.
D) THE NEED FOR REAPPLICATION OF SEEDING, NETTING AND/OR MULCHING.
E) THE OVERALL EFFECTIVENESS OF THE CONTROL PLAN.

ALL TEMPORARY AND PERMANENT CONTROL DEVICES MUST BE MAINTAINED AND REPAIRED AS NEEDED TO ASSURE CONTINUED PERFORMANCE OF THEIR INTENDED FUNCTION. ALL NECESSARY REPAIRS SHALL BE PERFORMED IMMEDIATELY.

THESE PLANS INDICATE THE CONTROL MEASURES TO BE PUT IN PLACE. ADDITIONAL CONTROL MEASURES SHALL BE IMPLEMENTED AS SITE CONDITIONS CHANGE AND UNFORESEEN PROBLEMS OCCUR. IMPLEMENTATION OF THE ADDITIONAL CONTROL MEASURES SHALL BE AT THE DISCRETION OF THE CONTRACTOR, THE SITE ENGINEER OR THE TOWN.

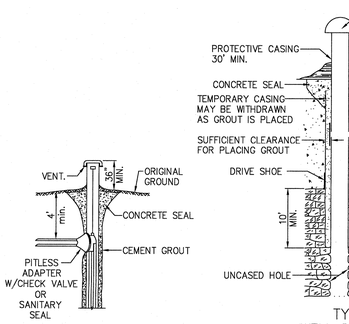

TYPE 2
WELL DRILLED IN
WATER-BEARING ROCK

DRILLED WELL DETAILS

NOTE: MINIMUM WELL YIELD TO BE 5 GPM. CONTACT WCDOH AND ENGINEER IF WELL YIELD IS LESS THAN 5 GPM.

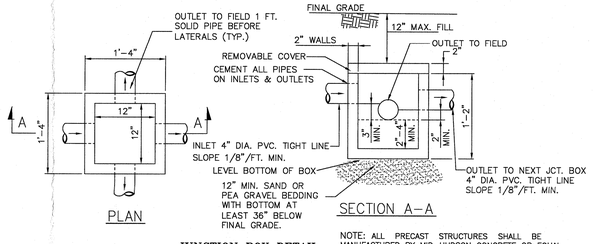

PLAN

SECTION A-A

JUNCTION BOX DETAIL

N.T.S.

NOTE: ALL PRECAST STRUCTURES SHALL BE MANUFACTURED BY MID-HUDSON CONCRETE OR EQUAL AND SHALL COMPLY WITH THE FOLLOWING DESIGN CRITERIA: CONCRETE TO TEST 4000PSI AT 28 DAYS STEEL REINFORCEMENT-6"x6"x10GA. S.W.M.

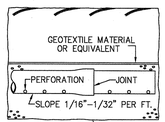

LONGITUDINAL VIEW

TYPE	A	B	C	D	E	F
24	6" TO 12"	13"	SEE NOTE 5	24"	12"	6"

NOTES:
1. MAXIMUM LATERAL LENGTH (GRAVITY) = 60 FT.
2. MAXIMUM LATERAL LENGTH (DOSING) = 100 FT.
3. MAXIMUM SLOPE (GRAVITY) = 0.5 %
4. MAXIMUM SLOPE (DOSING) = 0.3 %
5. DISTANCE - BOTTOM OF TRENCH TO:
   a. GROUND WATER TABLE = 5.0 FT.
   b. LEDGE ROCK. = 5.0 FT.
6. ALL UNCONNECTED LATERAL ENDS MUST BE CAPPED.

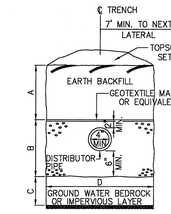

CROSS SECTIONAL VIEW

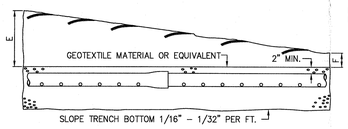

TRENCH PROFILE

ABSORPTION TRENCH DETAIL

NOT TO SCALE

SEPTIC TANK NOTES

- TANKS MUST BE WATERTIGHT, CONSTRUCTED OF DURABLE MATERIAL NOT SUBJECT TO CORROSION, DECAY, FROST DAMAGE, OR CRACKING.
- TANKS SHALL HAVE A LIQUID DEPTH OF 48 INCHES OR MORE AND SHALL HAVE TOP OPENING WITH A MINIMUM OF 20 INCHES IN THE SHORTEST DIMENSION TO ALLOW ENTRY INTO THE TANK.
- TANKS SHALL HAVE INLET AND OUTLET BAFFLES, SANITARY TEES OR OTHER DEVICES TO PREVENT THE PASSAGE OF FLOATING SOLIDS AND TO MINIMIZE DISTURBANCE OF SETTLED SLUDGE AND FLOATING SCUM BY SEWAGE ENTERING AND LEAVING THE TANK. OUTLET DESIGNS SUCH AS GAS DEFLECTION BAFFLES ARE STRONGLY RECOMMENDED IN ALL TANKS. INLET AND OUTLET BAFFLES SHALL EXTEND A MINIMUM OF 16 AND 18 INCHES RESPECTIVELY THE DISTANCE BETWEEN THE OUTLET BAFFLE AND THE OUTLET SHALL NOT EXCEED SIX INCHES. BAFFLES SHALL BE CONSTRUCTED OF A DURABLE MATERIAL NOT SUBJECT TO CORROSION, DECAY OR CRACKING.
- THERE SHALL BE A MINIMUM OF ONE INCH CLEARANCE BETWEEN THE UNDERSIDE OF THE TOP OF THE TANK AND THE TOP OF ALL BAFFLES, PARTITION AND/OR TEES TO PERMIT VENTING OF TANK GASES MULTI-CHAMBER AND MULTI-TANK SYSTEMS SHALL ALSO BE DESIGNED TO PERMIT THE VENTING OF TANK GASES.

WESTCHESTER COUNTY DEPARTMENT OF HEALTH
Bureau of Environmental Quality
Beresford FILE NUMBER: L2021-02 Lewisboro

This plan is approved for construction of an ONSITE WASTEWATER TREATMENT SYSTEM and INDIVIDUAL WATER SUPPLY SYSTEM pursuant to Article VIII and Article VII of the Westchester County Sanitary Code, subject to provisions of the APPROVAL TO CONSTRUCT issued this date.

Approved by: [signature] 2/3/21 Date

4BR OWTS, 1500gal septic tank, 504LF trench and private well.

REVISION	DATE	APPROVED
△1 AS PER WCDOH COMMENT LETTER DATED DECEMBER 3, 2020	12.15.20	RR

DESIGNER: RR
DRAWN BY: RR
CHECK BY: RR
DATE: 03.31.20
SCALE: as shown
PROJECT NO.: beresford

STATE OF NEW YORK · ROBERT ROSELLI · No. OF 86664 · LICENSED PROFESSIONAL ENGINEER

ROBERT ROSELLI, PE
NY LIC. NO. 078664

ROBERT ROSELLI, PE
PO BOX 837, MAHWAH, NJ 07430
213 ROUTE 100, KATONAH, NY 10536
TEL: (201) 993-0781 Info@Upstatedevelopment.com

PROPOSED SEPTIC SYSTEM FOR THE BERESFORD RESIDENCE
SILVER SPRING ROAD
TAX MAP 78.1 BLOCK 2 LOT 11
TOWN OF LEWISBORO, NY 10590

DRAWING NO: 1
SHEET 1 OF 1

C:\DB Proj\Proj\Lewisboro\Beresford 243 Silver Spring Rd\Septic Plan 12-11-20.dwg, 1/28/2021 11:18:00 AM, DWG To PDF.pc3

Front Elevation

Scale: 1/4" = 1'-0"

L2021-02

DEPARTMENT OF HEALTH
FEB - 8 2021
MT. KISCO D.O.-BEQ

Four bedrooms

Preliminary For Westchester Board Of Health

DeMasi Architects P.C.
105 SMITH AVENUE, MOUNT KISCO, NEW YORK 10549
PHONE: (914) 666-3058
EMAIL: Lou@DemasiArchitects.com

REGISTERED ARCHITECT LOUIS DEMASI 026061 STATE OF NEW YORK

Residence For
Lot 111
Silver Spring Road
Lewisboro NY

Revision	Date

Date: Oct. 23, 2020

Job No: 220-111

Drawing: 1 OF 6

These plans are not valid for a building permit unless originally signed and sealed by the Architect and are for the construction of one structure only by the person whose name appears on the plans.

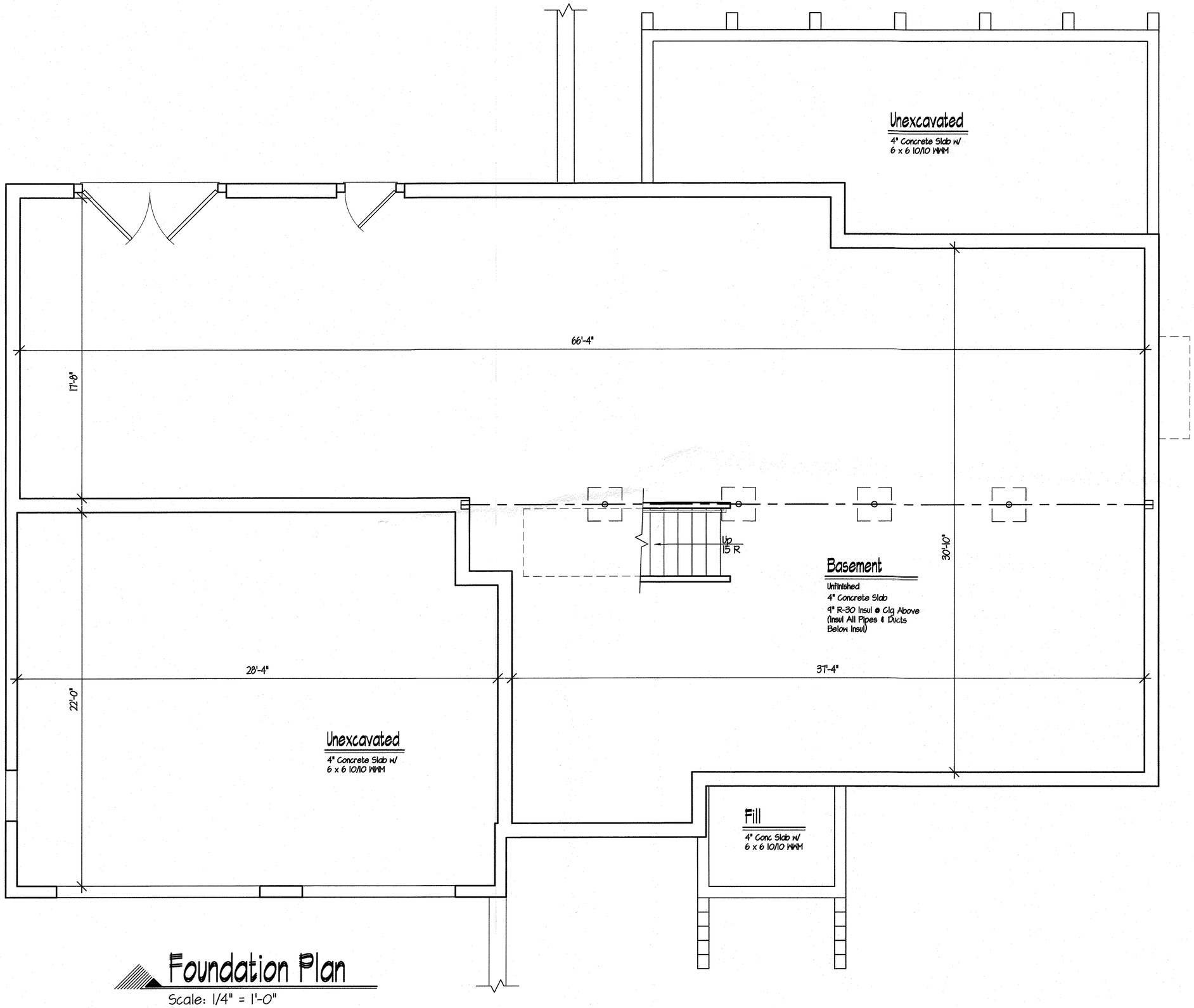

Foundation Plan

Scale: 1/4" = 1'-0"

DeMasi Architects P.C.
105 SMITH AVENUE, MOUNT KISCO, NEW YORK 10549
PHONE: (914) 666-3858
EMAIL: Lou@DemasiArchitects.com

REGISTERED ARCHITECT LUIGI DEMASI 4101 STATE OF NEW YORK

Preliminary For Westchester Board Of Health

Residence For
Lot 11
Silver Spring Road
Lewisboro NY

Revision	Date

Date Oct. 23, 2020

Job No 220-111

Drawing 2 OF 6

These plans are not valid for a building permit unless originally signed and sealed by the Architect and are for the construction of one Structure only by the person whose name appears on the plans.

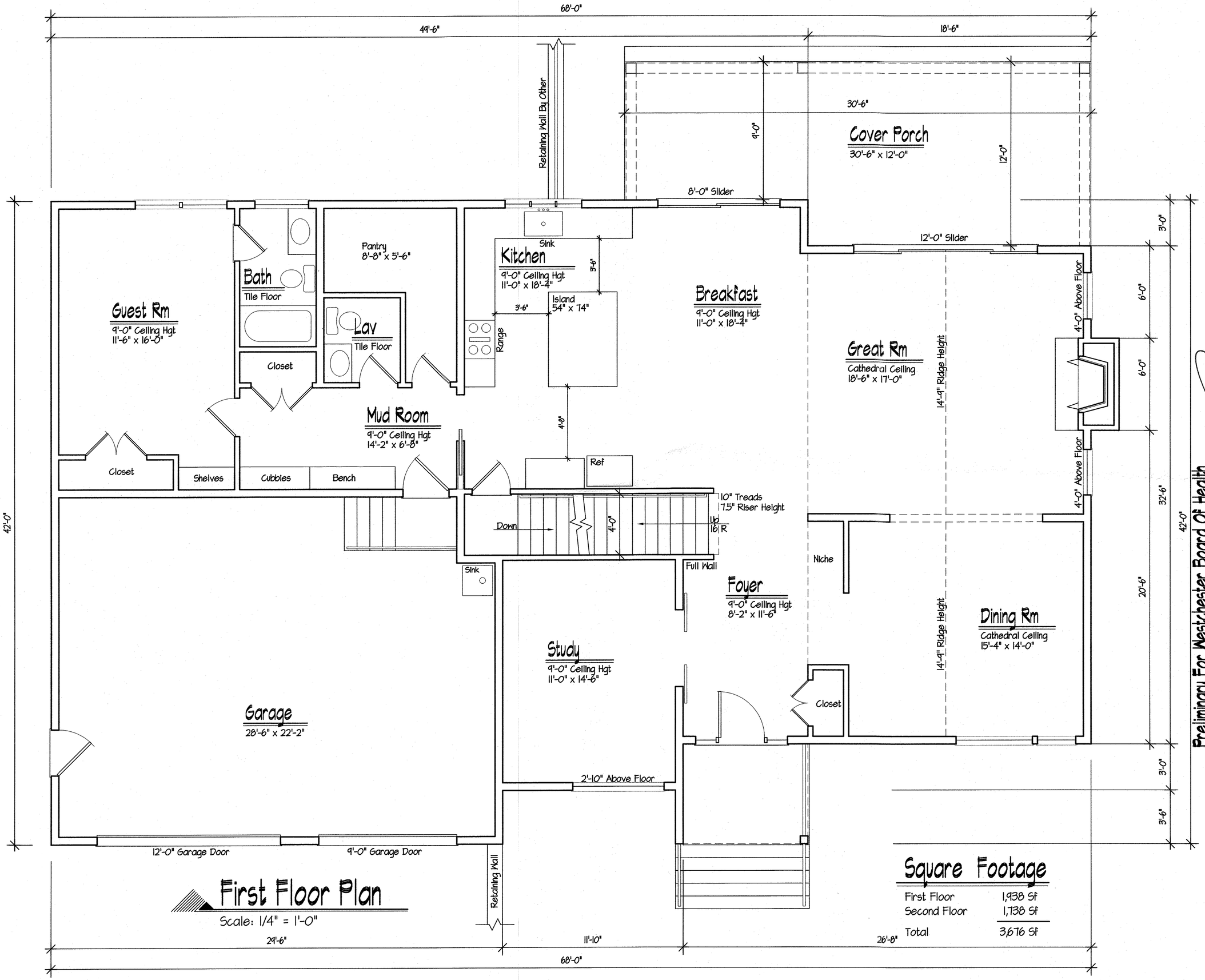

First Floor Plan

Scale: 1/4" = 1'-0"

Square Footage

First Floor	1,938 Sf
Second Floor	1,738 Sf
Total	3,676 Sf

DeMasi Architects P.C.
105 SMITH AVENUE, MOUNT KISCO, NEW YORK 10549
PHONE: (914) 666-3858
EMAIL: Lou@DemasiArchitects.com

LUIGI DEMASI ARCHITECT 031101 STATE OF NEW YORK

Preliminary For Westchester Board Of Health

Residence For
Lot 11
Silver Spring Road
Lewisboro NY

Revision	Date

Date Oct. 23, 2020

Job No 220-111

Drawing 3 OF 6

These plans are not valid for a building permit unless originally signed and sealed by the Architect and are for the construction of one structure only by the person whose name appears on the plans.

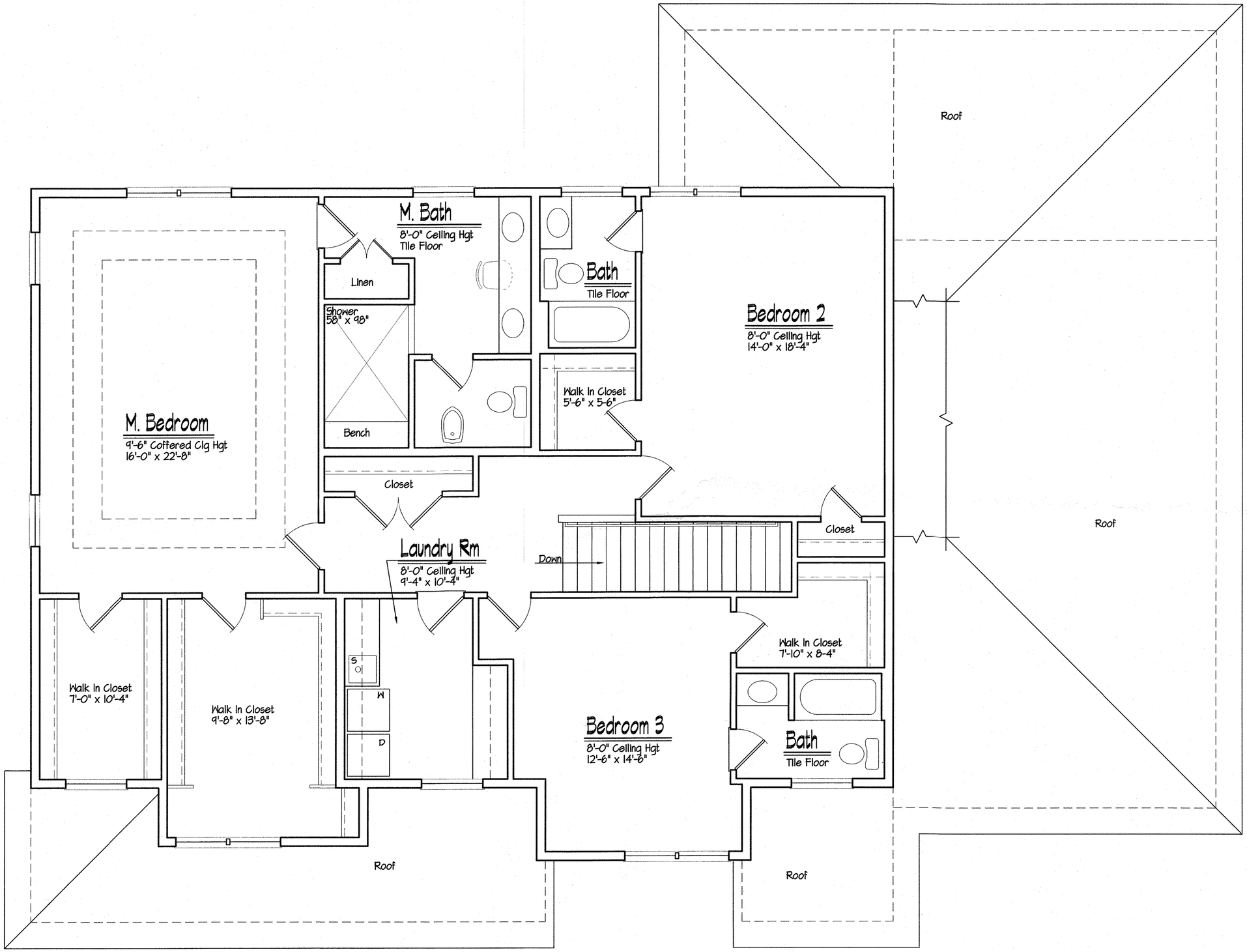

Second Floor Plan

Scale: 1/4" = 1'-0"

DeMasi Architects P.C.
105 SMITH AVENUE, MOUNT KISCO, NEW YORK 10549
PHONE: (914) 666-3858
EMAIL: Lou@DemasiArchitects.com

REGISTERED ARCHITECT LUIGI DEMASI STATE OF NEW YORK

Preliminary For Westchester Board Of Health

Residence For
Lot 11
Silver Spring Road
Lewisboro NY

Revision	Date

Date Oct. 23, 2020

Job No 220-111

Drawing 4 OF 6

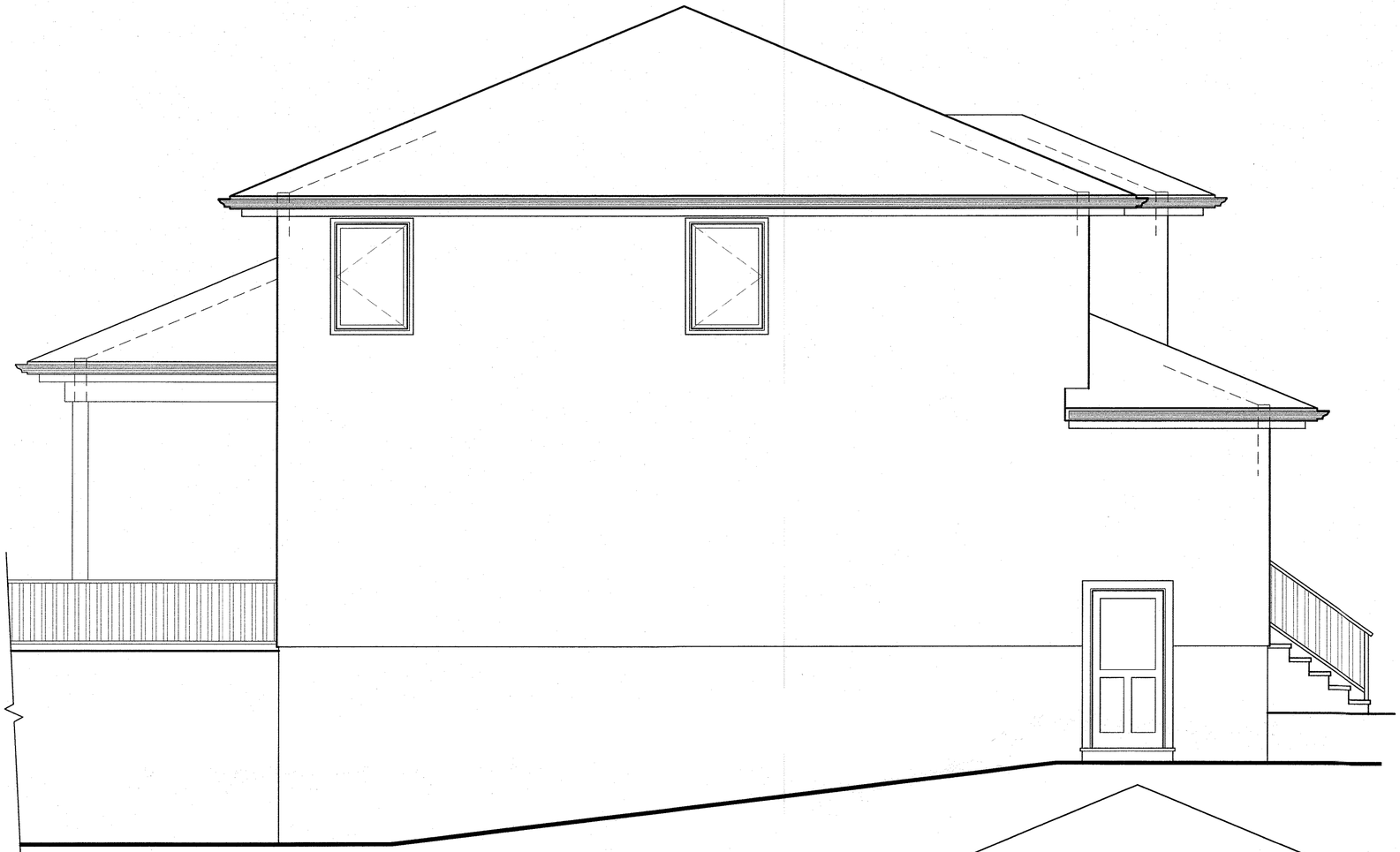

Left Side Elevation

Scale: 1/4" = 1'-0"

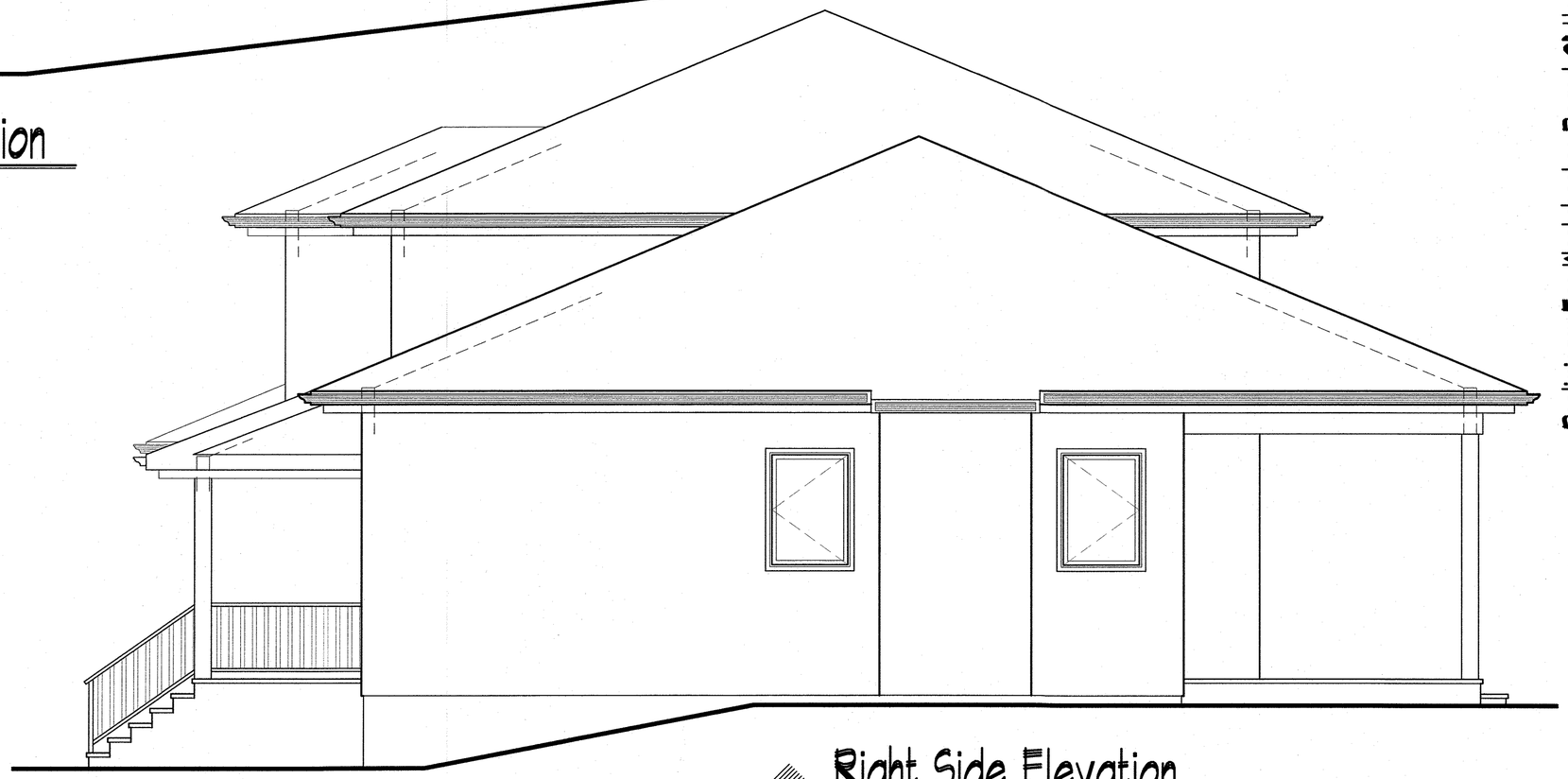

Right Side Elevation

Scale: 1/4" = 1'-0"

DeMasi Architects P.C.

105 SMITH AVENUE, MOUNT KISCO, NEW YORK 10549

PHONE: (914) 666-3858

EMAIL: Lou@DemasiArchitects.com

REGISTERED ARCHITECT LUCIO DEMASI 020106 STATE OF NEW YORK

Preliminary For Westchester Board Of Health

Residence For

Lot 11

Sliver Spring Road

Lewisboro NY

Revision	Date

Date Oct. 23, 2020

Job No 220-111

Drawing 5 OF 6

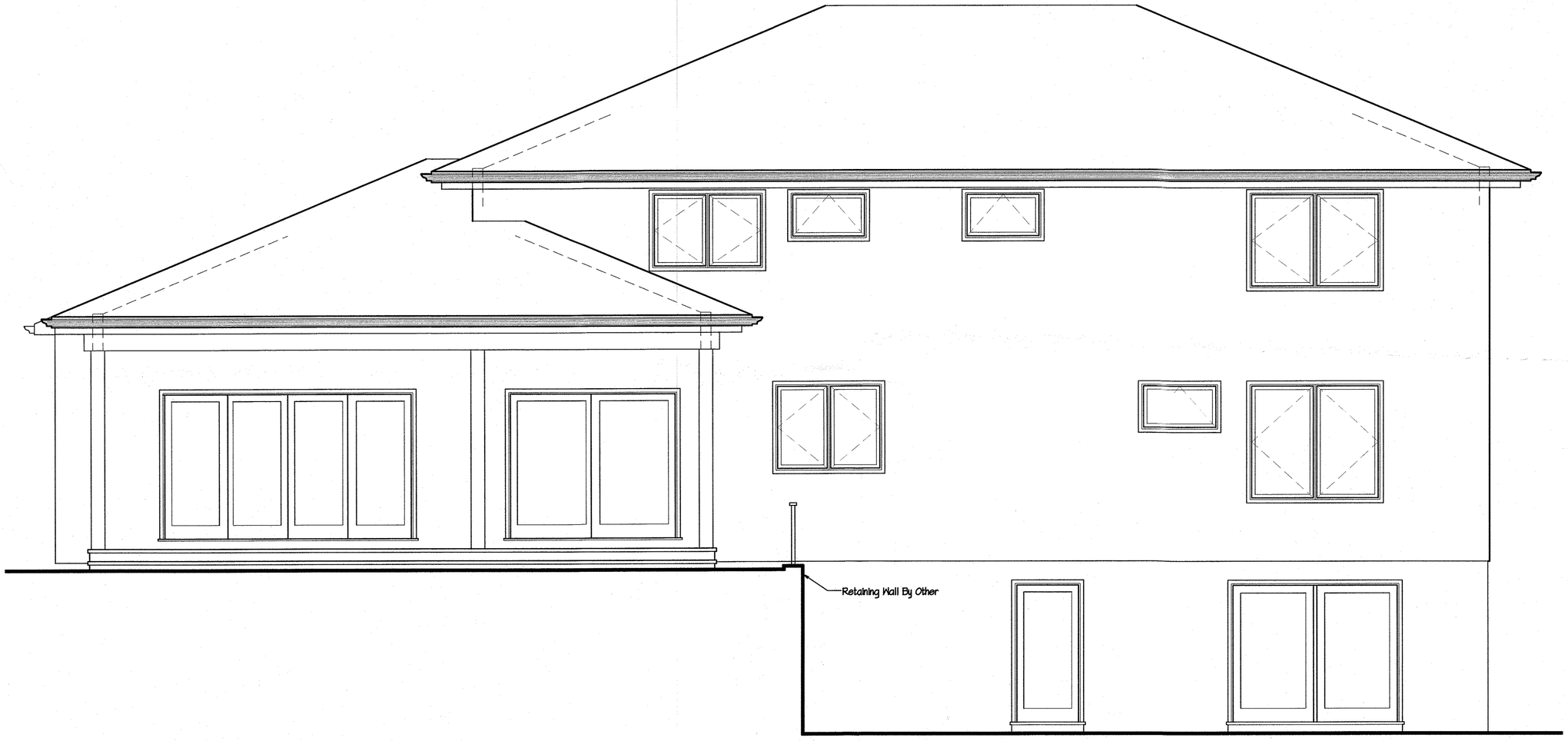

Rear Elevation

Scale: 1/4" = 1'-0"

DeMasi Architects P.C.
105 SMITH AVENUE, MOUNT KISCO, NEW YORK 10549
PHONE: (914) 666-3858
EMAIL: Lou@DemasiArchitects.com

REGISTERED ARCHITECT LOUIS DEMASI 031951 STATE OF NEW YORK

Preliminary For Westchester Board Of Health

Residence For
Lot 11
Sliver Spring Road
Lewisboro NY

Revision	Date

Date: Oct. 23, 2020

Job No: 220-111

Drawing: 6 OF 6

These plans are not valid for a building permit unless originally signed and sealed by the Architect and are for the construction of one structure only by the person whose name appears on the plans.

#47-21 WP
09-21 SW

Beresford
rec'd @ 7/20/21 PB
NTJ

Photo 1 Looking east along gravel common drive.

Photo 2 Looking east where gravel common drive splits. Note grassed travel-way into site where car is parked in left side of photo; driveway leading to neighbor's residence in the right side of photo.

March 2020- The Beresford Site, Silver Spring Road, Lewisboro, NY

Photo 3 Looking southwest along grassed travel-way section located on the southwest corner of main "flag" portion of the site.

Photo 4 Looking southwest across woodlands on east-central portion of the site.

Photo 5 Looking northwest across level swampland in wetland WL-"A".

Photo 6 Looking north toward pond associated with wetland WL-"A" located on the central-northern edge of narrow "pole" portion of the site.

Photo 7 Looking southeast toward pipe at southeast side of pond associated with wetland WL-"A". Note pipe goes under gravel common drive.

Photo 8 Looking west toward pond and swampland associated with wetland WL-"B". Note swampland in foreground of photo; pond in center of photo; common drive in right edge of photo; neighbor's residence in upper left edge of photo.

RESOLUTION ADOPTED BY THE TOWN BOARD
OF THE TOWN OF LEWISBORO
AT A MEETING HELD ON AUGUST 9, 2021

RESOLUTION

RESOLVED, that the Town Board does hereby approve the Comprehensive Steering Committee's request for ACARC, Planning, Town, and Zoning Boards to review the RFP for consulting services.

STATE OF NEW YORK
COUNTY OF WESTCHESTER

I, JANET L. DONOHUE, Town Clerk of the Town of Lewisboro, County of Westchester, State of New York, do hereby certify that I have compared the preceding copy of a Resolution adopted by the Town Board of the Town Board of Lewisboro at a meeting held on the 9th day of August 2021, to the original thereof, and that the same is a true and exact copy of said original and of the whole thereof.

_____
Janet L. Donohue
Town Clerk

Dated at South Salem, New York
this 10th day of August 2021

Final Draft as of 7/25/2021 - For review by Planning Board, Zoning Board of Appeals and the Architecture & Community Appearance Review Council – feedback will be due back by 8/26/2021

Request for Proposal
Update of 1985 Comprehensive Master Plan for the Town of Lewisboro and Amendments to Town Zoning Code
Submittal Due Date:
Submittal Location:

Project Description

The Town Board by Resolution dated January 11, 2021 authorized the formation of a Steering Committee to begin the work of updating the 1985 Comprehensive Master Plan. One of the charges of the Committee is to prepare a Request for Proposal seeking to engage such professional service of qualified planning consultants to review and update the Town's 1985 Comprehensive Master Plan in accordance with vision determined by the Town Board after an inclusive, thorough and transparent engagement process with the residents of theTown.

The Town seeks a statement of qualifications from a consulting service team that is professionally capable, familiar with the region and has worked on similar projects. The project methodology must include a thorough, innovative and collaborative plan that engages and encourages a variety of stakeholders to participate in the development of the Comprehensive Master Plan, and the formulation of zoning amendments and regulations consistent with such Plan.

The process will culminate in an integrated document that reflects the needs and desires of the community and helps direct future decisions as it relates to the orderly growth, revitalization, and sustainable development of the Town with outlines for a plan for achieving those goals including proposals for regulatory changes. The Town seeks consultants whose qualifications, experience methodology and cost of services will be able to meet these objectives.

Town of Lewisboro – Background

Lewisboro is situated 50 miles north of New York City in Westchester County on the Connecticut border. The Town consists of 6 Hamlets, Goldens Bridge, Cross River, Waccabuc, South Salem, Lewisboro, and Vista.

All are governed by the Lewisboro Town Government. Post Offices are located in Goldens Bridge (10526), Cross River (10518), Waccabuc (10597), and South Salem (10590).

Commercial centers with neighborhood shopping are located in Goldens Bridge, Cross River, and Vista.

There are approximately 5900 parcels of land in Lewisboro.

The School District is the Katonah-Lewisboro School District. Schools in the system include Katonah Elementary School, Increase Miller Elementary School, Meadow Pond Elementary School, John Jay Middle School, and John Jay High School.

***Census 2020**

Population	12,599
Residential Median Age	46.2
Households	4,703
Average Family Size	2.67
Average Household Income	$158,299
Median Home Price	$629,500
Average Annual Rainfall and Snow	48.64 inches

*** Census Information not yet certified**

The 1973 Town Plan, Lewisboro's first town plan, was prepared before 1-684 was constructed, major subdivisions in town were built/occupied or New York City was concerned about the reservoirs in the watershed. It was noted that the Town was at the lowest housing density (at least 1 acre/house) and the plan called for every hamlet to have multifamily housing.

The current 1985 Master Plan identified approximately 35% of our land area as "developed land". Slightly less than 5% of Lewisboro's total area, 851 acres, is waterbodies. Total land area of the town is approximately 29 square miles.

The1985 Plan also addressed business development outside of the hamlets through Special Use Permits for non-conforming uses, recommended the creation of the five Special Character Overlay Districts/Architecture & Community Appearance Review Council and deferred strengthening the hamlets.

The 1999 Plan Update contained a series of recommendations. A status study of the recommendations has been compiled and should be evaluated as to their current value.

Municipal Governance As it Relates to Planning and Development

The Supervisor is elected for a two-year term of office, is the Chief Administrator and Fiscal Officer of the Town of Lewisboro and presides at all meetings of the Town Board. The Town Board is the most important arm of town government consisting of the

Supervisor and four councilmen/councilwomen (whose elected terms of office are four years and are normally staggered.) The Supervisor and Town Board may appoint committees of Town Board members to aid the full Town Board.

The Planning Board consists of five members for staggered five-year terms as does the Zoning Board of Appeals.

Other committee and Councils appointed by the Supervisor and Town Board are Advisory Committee for the Disabled, Antenna Advisory Board, Architecture & Community Appearance Council, Board of Assessment Review, Cable TV Committee, Conservation Advisory Council, Emergency Management Committee, Housing Committee, Landmark Advisory Committee, Lewisboro Grant Committee, Lewisboro LBGTBQ + Pride Task Force, Open Space and Preserves Advisory Committee, Parks and Recreation Advisory Council, Pedestrian and Bicycle Advisory Committee, Stormwater Management Committee, Sustainability Committee and Veterans Advisory Committee.

The Town Board has appointed the Steering Committee to produce and distribute a Request for Proposal for a consultant/consultants to aid in the drafting of a Comprehensive Plan, possible zoning amendments and to make recommendations for implementation to the Town Board. The Town Board has indicated that funding is in place. The Steering Committee is further charged with facilitating an open, transparent process culminating in an updated Comprehensive Plan. For additional information on the Steering Committee's activities to-date, please visit www.lewisborogov.com/cmpsc.

Project Overview

The central purpose of the project is to update the Comprehensive Plan , last updated in 1985. The Comprehensive Plan update will focus on:

Developing a vision for the Town of Lewisboro which will ensure a Sustainable Community, recognizing the need for fair and equitable development with a view toward a vibrant tax base.

Producing a Draft Comprehensive Plan and possibly zoning amendments, as necessary to achieve Planning objectives. Producing recommendations of proposed means to implement goals, objectives and policies.

Community engagement is of paramount importance in determination of a vision for the Town of Lewisboro. In addition to the residents, Town Departments and mandatory boards, the advisory boards and committees, the various civic committees should be included in the development of the Plan.

Specific Areas of Concern

A. Study Areas-self described Hamlets

Cross River
Goldens Bridge
Lewisboro
South Salem
Waccabuc
Vista

B. Lake Communities

C. Land Use

Undeveloped Property
Reuse/Repurpose of Properties
Commercial Uses in Residential Areas

D**. Fair & Affordable Housing**

Review housing resources and needs including multifamily housing and accessory structures on single family lots.
Increased housing choice
Maintenance of neighborhood character areas

E. **Technology/Communications/Utilities**

Improvements to technology,communications and utilities to foster a Sustainable Community.

F**. Sustainability**

Seek a competitive edge, adequate recreation, overall livability, review of physical development required for sustainability

G**. Access to transportation**

Amount and condition of roads, parking, demand for public transit, accident rates/dangerous
road segments, proposed development, regional transportation plans and infrastructure condition

H**. Environment**

Wetlands
Alternate energy
Stormwater management
Open space
Climate change
Parks and Recreation
Preserves

I. **Historic Designations**

Intrinsic value of historic resources in our community, connection to economic development and connection to neighborhood identities and development practices.

J**. Social Equity**

Throughout the Comprehensive Plan process and incorporated into the final recommendations to the Lewisboro Town Board, an "equity in all policies approach" as defined by the American Planning Association must be used.

Scope of Work And Deliverables

1. Review of Existing Comprehensive Master Plan adopted by the Town Board on May 24,1985 and other key documents including but not limited to:
   - Bike Pedestrian Master Plan Addendum adopted 9/22/2014,
   - Hamlet Forum Report January 1997,
   - Comprehensive Master Plan Update Plan December 14, 1999,
   - The Croton Plan for Westchester,
   - The Northern Westchester Watershed Memorandum of Understanding with the County of Westchester, and the
   - Wireless Telecommunication Infrastructure Master Plan for the Northern Westchester County communities by Cityscape under an agreement with the County of Westchester in 2021.
   - Prepare an Existing Conditions Report

2. Conduct a series of meetings, including the following:

   A. A kickoff meeting with the Comprehensive Plan Steering Committee to confirm project timeline, plans for collaboration with the Steering Committee and plans for communicating with and getting the public engaged.

   B. At least two work sessions with each of the following Town Boards to gather information pertaining to the current conflicts and challenges experienced in using the existing Comprehensive Plan, administrating the existing Town Code, and in managing development within the Town:
      - Town Board
      - Planning Board
      - Architecture & Community Appearance Review Council
      - Zoning Board of Appeals
      - Conservation Advisory Council

   C. At least one work session with each of the Town Committees and Task Forces mentioned in the Municipal Governance Section (above) to gather information pertaining to the current conflicts and challenges experienced in using the existing Comprehensive Plan, administrating the existing Town Code, and in managing development within the Town.

D. At least one public work session for each of the following topics from the current Plan to engage the residents of the Town in a discussion about the vision of the Town for the future as it pertains to land use, Town resources, and quality of life issues:

- Updated Vision Statement
- Hamlets (one for each)
- Specific Areas of Concern
- Zoning

3. Develop and present an outreach and engagement plan**.** A robust outreach and engagement plan will be required to build as much consensus as possible. Consultant will suggest whatever additional meetings and various formats to accomplish this goal. Included but not limited to are meetings with Town groups identified in item 1 in this Section, civic and resident groups, and general public sessions to gather information pertaining to current conflicts and challenges in using the existing Plan, administrating current Town Code and/or managing the development of the Town. Please refer to Methods, item 14 in this Section.

4. Prepare a draft Report of the above for submission to the Town Board. In addition to the evaluations, assessments, and documentation listed above, this Report should list the revisions to the current Comprehensive Plan proposed by the Consultant.

5. Circulate this draft Report to the other Boards, Committees, and Task Forces, as well as make it available to the community for comments and suggestions.

6. Conduct two public community work sessions convened by the Town Board to review the draft Report.

7. Revise the draft Report in accordance with the comments and suggestions received in the work sessions and issue a Final Report.

8. At this point in the process, if the Report has recommended edits to the current Comprehensive Plan, the Town Board will decide how it wants to proceed and what edits are to be made.

9. Prepare the text and diagram revisions, amendments, and additions to the current Comprehensive Plan as directed by the Town Board.

10. Present the revised text and diagrams, as well as any other proposed amendments and additions to the Town Board. The Town Board is responsible for the final decisions that

will be made regarding the changes to the Comprehensive Plan.

11. In the event that the proposed changes to the Comprehensive Plan mandate changes to the Town Code, the Town Board shall have the option of requesting that the Consultant continue their relationship with the Town and extend their Contract for Services.

12. Prepare an outline of the text in the Town Code that will need to be revised to accommodate the proposed amendments to the Comprehensive Plan and submit this outline to the Town Board and the Town Attorney. It is anticipated that the actual wording for the changes to the Town Code will be prepared by the Town Attorney.

13. Prepare a mark up to the Town's Official Zoning Map of any proposed changes to the Zoning Districts and submit this to the Town Board.

14. Prepare a Long Form Environmental Assessment Form (EAF) describing the environmental impacts of the proposed changes to the Town Code in accordance with SEQRA requirements and attend the Board meetings at which the EAF will be considered in anticipation of the Town Board declaring itself to be lead agency. Coordinate with Town staff and Town Attorney and Town Planning Board Attorney as to all issues of SEQRA compliance associated with the preparation and adoption of an updated Comprehensive Plan.

15. Assist the Town in the preparation of a Draft Environmental Impact Statement (DEIS), Final Environmental Impact Statement (FEIS) and Findings Statement in the event that a positive declaration is made for the proposed action. The preparation of a DEIS shall be considered an additional service and not within this Scope of Work.

16. Analyze pedestrian and bicycle circulation and problem areas such as increased traffic and identify areas for future study.

17. Develop a clear direction of how and where development can occur over the next 10 to 20 years.

18. Determine a specific implementation Plan for underutilized parcels that could be developed or redeveloped for commercial use without negatively impacting existing residential use.

19. Methods
    - Fair and equal engagement opportunities for all community members, for example, online/virtual events or pop-ups. Again, an "equity in all policies approach" as defined by the American Planning Association must be used.

- Creative gatherings to brainstorm and collaboratively develop community vision
- Participatory, vision focused public input
- Fun, connection driven events
- Social media and online organizing designed to boost community engagement
- Stakeholder and issue-based listening sessions
- One-on-one conversations with community leaders
- Digital and printed surveys
- User-friendly and engaging Comprehensive Plan documents that contain infographics and creative graphic design; and also include educational elements to bring Town residents up to speed on Planning concepts

20. Project Management
    - Active communications, collaborative planning with Town staff and the Comprehensive Plan Steering Committee
    - Facilitated conversations with Steering Committee, topic groups, town staff to share report results and discuss next steps
    - Regular updates and check ins with Town Board, Planning Board and other town bodies
    - Ongoing availability during and after project to discuss progress, challenges, opportunities and successes

SCHEDULE

The Scope of Work as outlined above is proposed to be completed within 12 months. The Respondent shall submit a proposed project schedule for the delivery of services identifying key benchmarks in the planning process as part of the Proposal for Services.

The final schedule shall be mutually agreed to by the Consultant and the Town Board, subject to modification by the Town Board specifically to provide adequate response time for Boards, Committees, and the public.

CRITERIA FOR CONSULTANT SELECTION

The successful Respondent should understand the requirements of the RFP and communicate that understanding in its proposal. The Town is seeking candidates with strong qualifications in community planning, land use regulation, urban design, and codification. The Town is also seeking candidates with a track record of producing user-

friendly and engaging Comprehensive Plan documents that contain infographics and creative graphic design and include educational elements to bring Town residents up to speed on Planning concepts.

The Respondent is encouraged to add to, modify, or clarify any of the Scope of Work items it deems appropriate to obtain a high-quality plan. All changes should be listed and explained. However, the Scope of Work proposed, at minimum, must accomplish the goals and work outlined above.

The following should be included in the Respondents submission:

1. A Letter of Transmittal including
    a. A statement indicating the Respondents understanding of the work to be performed.
    b. An affirmation of the Respondents qualifications for professionally and expertly conducting the work as understood.
    c. The Respondents contact the person concerning the proposal and a telephone number where that person can be reached.

2. A Firm Profile including
    a. A brief statement indicating the Respondents experience in conducting work of the nature sought by this RFP.
    b. Resumes of individual consultants or employees proposed to conduct the work and the specific duties of each consultant or employee.
    c. A list of projects completed by the Respondent that can demonstrate the Respondents familiarity with the subject matter and ability to provide the services required by the Scope of Work.
    d. A brief reference list of other municipalities or clients served by the Respondent with the names and telephone numbers of contact persons.
    e. The location of the Respondents office.

3. A detailed description of the procedures and methods the Respondent proposes to use to complete the work requested in the RFP.

4. A draft project work schedule including time frames for the various tasks and a calendar for meetings and presentations

5. A maximum bid price for the cost of services for a specific defined Scope of Work. Full cost information should include the estimated number of hours for each task by personnel, the hourly billing rates for each person who will be participating in the delivery of services, and an estimate of reimbursable expenses. The cost shall be based on the hours of work provided and reimbursable expenses and shall not exceed the maximum bid price proposed, unless an amendment to the contract is negotiated and approved by the Town Board. The Town reserves the right to negotiate fees and payment schedules with the selected Respondent.

6. The method of billing. The Town will consider paying on a periodic basis as substantial portions of the work are performed, but not more than one payment per month.

7. A written guarantee certifying that the bid price will be honored by the Respondent for a time period of 90 days inclusive from the date that submissions are due.

SELECTION PROCESS

The Steering Committee in conjunction with the Chairs of the Planning Board, Zoning Board and Architecture & Community Appearance Board or their delegate, will review the proposals submitted and determine which proposals they believe serves the best interests of the Town. The Steering Committee and the Planning Board will meet with selected Respondents to discuss their Proposal and to get a better understanding of the Respondents approach to this kind of project. The Steering Committee will then make a recommendation to the Town Board for the selection of a Consultant to provide these Services. The Town reserves the absolute right to base its selection on any legal criteria it deems appropriate for the selection process or to reject all responses to the Request for Proposals.

LEGAL AND FINANCIAL REQUIREMENTS

This Request for Proposals does not constitute an offer. The Town of Lewisboro reserves the right to reject any and all proposals; to issue additional solicitations for proposals; to provide addenda to this RFP; to waive any irregularities in proposals received; to select any proposal as the basis for negotiation of a contract and to negotiate with respondents for any amendments or other modifications to their proposals; to conduct investigations with respect to the qualifications of each respondent; to exercise its discretion and apply its judgment with respect to any of the proposals received, the evaluation of the proposals, and the negotiation and award of any contract; to enter into an agreement for

only portions of the services contemplated; and to select the proposal that best satisfies the interests of the Town of Lewisboro, which may not necessarily be on the basis of price or any other single factor. In addition, the Town of Lewisboro reserves the right to stop work at any time and pay the Respondent only for the work completed as of date that notice to stop work is received by the Respondent.

The Town of Lewisboro assumes no responsibility or liability for costs incurred in the preparation or submission of any proposal. The Town is not responsible for any internal or external delivery delays that may cause any proposal to arrive beyond the stated deadline. To be considered, proposals must arrive at the office of and be time-stamped prior to the deadline. Proposals must be signed.

Procedure for Responding

Requests for clarification of the RFP should be made in writing and submitted to ….. no later than [date]

Questions regarding this RFP should be directed to …….. no later than [date]. Responses to questions and clarifications will be posted to the RFP portion of the Lewisboro website (?)

Interested applicants should submit a total of ten (10) hard copies of their proposals and all backup material plus a PDF in a digital file either by hand delivery or registered mail to:

The deadline for the submission of proposals is _____, 2021 at 2:00 PM.